Light Emitting Concrete (LEC)

Fahad Mohammad (CVE) /Hadia Hannan (ELE) / Anza Shaikh (COE) /Arham Khan (CVE)

SITUATION

Currently, the world recognizes concrete as just a dull, grey building material. However, concrete has the potential to cater to different functions as well.

The objective of this project is to extend the applications of concrete to the following:

1. Replacement for tube lights/bulbs
2. A decorative accessory- Decoration is seen as an important part of creating and maintaining social networks and identities
3. A new way of advertising- Advertisement has been increasingly used as popular medium for service or product promotion

PROBLEM

- Currently, the bulbs/tube-lights have a short life span, consume a large amount of energy, and are costly.
- Current techniques for advertisement include distribution of brochures and display of posters, which leads to unnecessary wastage of paper.
- Wall graffiti is another example of advertising, which leaves the walls dirty. It makes an area look run-down and uncared for, a place where you would not like to shop or live.

SOLUTION

Replace Bulbs/Tube-lights with Light Emitting Concrete (LEC)

Replacing bulbs/Tube-lights with LEC which contains Light Emitting Diodes (LED) is better in terms of cost, energy consumption, and life span as seen in Table 1. This means that LEC , in addition to providing structural strength for the walls, could also provide lighting without the hassle of installing bulbs or any kind of switches.

Table 1: Comparing the cost, energy cost and life span of incandescent bulb and LED [1]

Type of Bulb	Cost of 5 lamps (Dhs)	Annual energy cost (Dhs)	Lamp life (hours)
Incandescent/Halogen	61.37	588.21	1,000
tp24 CFL lamp	153.95	129.40	10,000
tp24 LED lamp	215.38	29.42	20,000

For countries such as those in the Gulf, where there is plenty of sunlight, LEC could be made more energy efficient by powering LEDs with solar energy.
As seen in Figure 1, solar-powered lighting consists of a solar panel or photovoltaic cell that collects the sun's energy during the day and stores it in a rechargeable gel cell battery. The intelligent controller senses when there is no longer any energy from the sun and automatically turns the LED light on using a portion of the stored energy in the rechargeable battery [2].

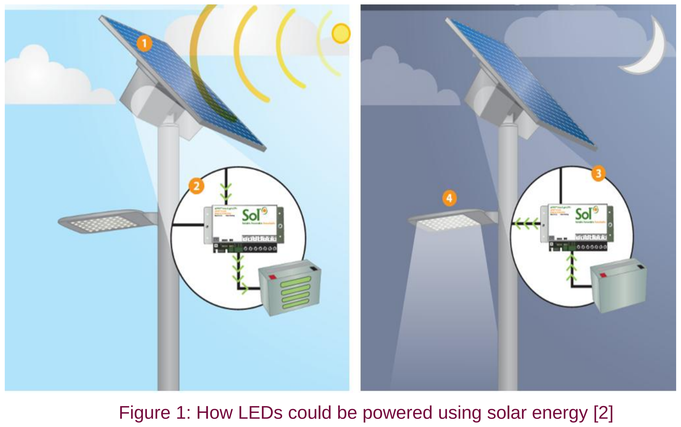

Figure 1: How LEDs could be powered using solar energy [2]

LEC as an Advertisement Tool

LEC can be used to display images, and hence, it can be used as an alternative way of advertising. LEC is a good advertising tool because:

- It will have a short shelf life which means you do not have to waste material, unlike the case with posters/brochures which are usually read once and then discarded.
- It could be customized according to an individual's preference of size and resolution.
- It will be controlled wirelessly, thereby making it possible to switch LEC on/off and change its display at anytime.

The Manufacture of LEC

As seen in Figure 2, LEC can be manufactured in the same way as regular concrete. What makes LEC different from regular concrete is the addition of optical fibers and LEDs which are embedded in the concrete mixture. The number of LEDs per block of LEC varies with the resolution required. However, for a good resolution, 60 LEDs per meter would be required.

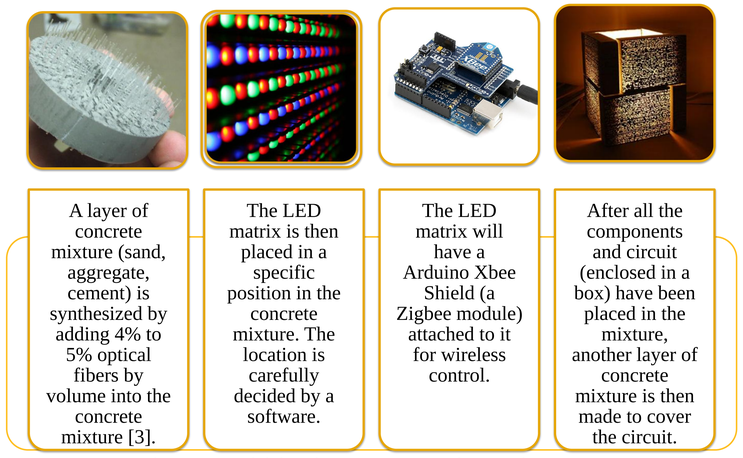

Figure 2: Explaining the steps to manufacture the LEC

Wireless Control of LEC:

LEC can be controlled with a wireless remote to switch the light on or off or reduce/increase the light intensity according to the user requirements. As seen in Figure 3, the wireless communication is as follows:

1. The Zigbee module is programmed using software installed on the computer known as Arduino, so that the module can send and receive signals.
2. The LED matrix inside the LEC will be connected to this Zigbee module and will receive signals to change their status to on/off. As seen in Figure 4, the port pins on the Arduino board will be connected to LEDs and some of the port pins will be dedicated to the controlling device for communication.
3. The same Zigbee module is installed inside the controlling device so that it can communicate to the LEC.

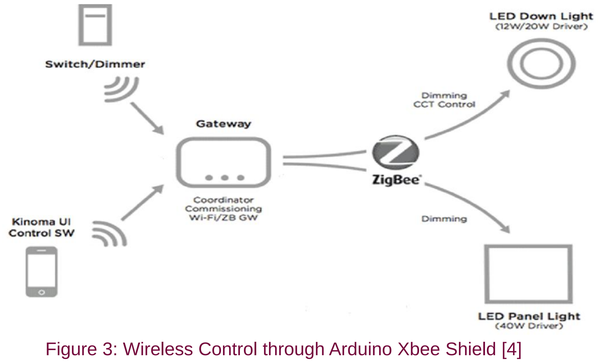

Figure 3: Wireless Control through Arduino Xbee Shield [4]

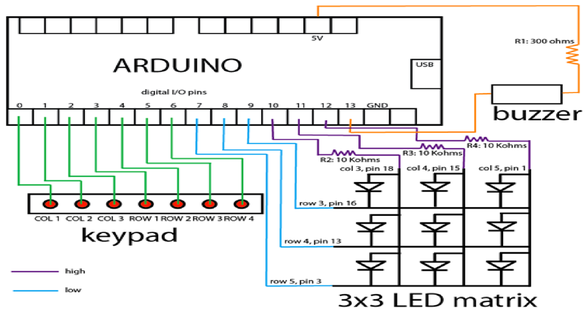

Figure 4: How LEDs are controlled by Arduino Xbee Shield [5]

EVALUATION

Advantages of using LEC:

- Wireless control-secure
- Great long-term investment
- Attractive
- Energy efficient
- In fact, worldwide, the switch to LED lighting could save energy consumption for lighting by 40% and reduce carbon emissions by 670 million tons, the equivalent output of about 640 medium sized power plants [6].

Disadvantages of using LEC:

- Costly to be considered for small projects as seen in Table 2
- Weather constraints
- Maintenance prices are high

Table 2: Cost of Materials/ Block of LEC

Components	Cost/Dhs
Concrete manufacturing (44 cm by 10cm by 21.5 cm)	4
Optical fiber cable (1 m)	1.725
Arduino Xbee Shield	16
200 LEDs/block	100
Total	121.725

REFERENCES

[1] C. Debenham, " Comparing light bulbs: upfront costs vs. running costs," YouGen- Energy made easy, Source/production information, May 8, 2012. [Online]. Available: http://www.yougen.co.uk/blogentry /1905/Comparing+light+bulbs%273A+upfront+costs+vs+running+costs/. [Accessed: April 8th,2014].

[2] "How Solar Lighting Works," Solar Lighting, 2013. [Online]. Available: http://www.solarlighting.com /how-it-works. [Accessed: April 8th,2014].

[3] B. K. Kashiyani, V. Raina, J. Pitroda, Dr. B. K. Shah. A Study on Transparent Concrete: *A Novel Architectural Material to Explore Construction Sector.* Vol. 2, Issue 8. 2013. Available:http://ijeit.com/ vol%202/Issue%208/IJEIT1412201302_18.pdf.[Accessed: April 8th,2014].

[4] "Zigbee Lighting Control Platform," *Marvell*. [Online]. Available: http://www.marvell.com/ledlighting/ zigbee-platform/. [Accessed: April 8th,2014].

[5] "231a-ag progressnov16," Computer Science Wiki, 17 January, 2010.[Online]. Available:http://cs.smith .edu/classwiki/index.php/231a-ag_progressnov16. [Accessed: April 8th,2014].

[6] A. Corrie. Shedding new light on LED lighting's benefits. *Plant Eng.* 2013.[Online].Available:http:// ezproxy.aus.edu/login?url=http://search.proquest.com/docview/1362080073?accountid=16946