Design and Construction of a Cross-Laminated Timber Skyscraper

Farhaaz Shaikh (57292) MCE
Ahmed Al Yazji (45894) CVE
Adil Patel (54384) ELE
Noura AlShamsi (52789) COE

Situation

Concrete and steel are currently the building materials in most skyscraper construction. Due to their negative impact on the environment, timber has been proposed as an alternative material.

- Current tallest timber building is the Barentshus Tower is 20 stories tall and in Norway [1]
- Taller buildings exist, but they are hybrid which means they incorporate concrete cores and steel frames

Problems

Timber as a building material reduces the negative impacts that steel and concrete have on the environment, but introduces the following new problems:

A. Strength problems of solid timber:

- Pure timber has height restrictions due to strength
- They require concrete cores to make up for strength losses

B. Fire problem of solid timber:

- Timber structures have a greater risk of fire than concrete structures

Solutions

Solution 1: Cross-Laminated Timber

The first proposed solution lies in the use of cross-laminated timber (CLT) as a building material. CLT is a material composed of stacked wooden panels, as shown in Figure 1 below:

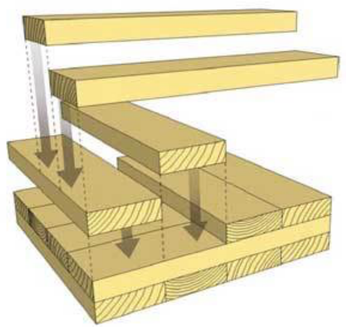

Figure 1: CLT stacking [2]

Table 1: Typical properties of CLT [3]

CLT Properties	
Bending Strength	24 N/mm^2
Compressive Strength	~24-30 N/mm^2
Elastic Modulus	12,000 N/mm^2
Thermal Conductivity	0.13 W/mK

The use of CLT will solve both of the listed problems of solid timber:

A. Solution to the strength problem:

- CLT has greater load distribution than solid wood allowing for lower thickness without compromising strength [3]
- Cross-lamination provides relatively high in-plane and out-of-plane strength and stiffness properties in both directions [4]

B. Solution to the fire problem:

- CLT inhibits damage to the load-bearing component of the panel by charring only the exterior when burned, at a rate of 0.63 mm/sec [5]

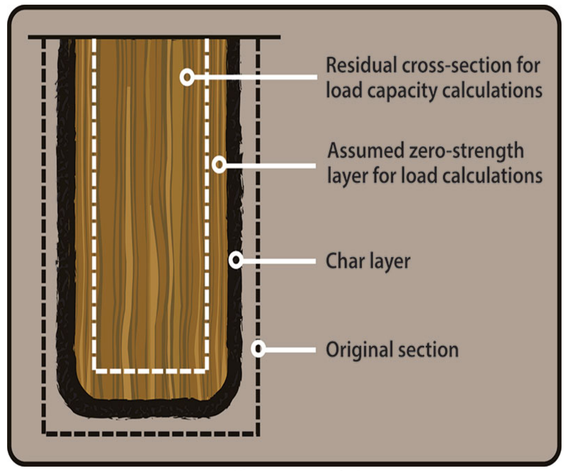

Figure 2: Charring of CLT [6]

Solution 2: Wireless Sensor Network

A wireless sensor network (WSN), shown in Figure 3, is an array of connected sensors and is used as a second solution to the fire issue.

- Sensors are placed in the building to scan temperature, smoke, and humidity, which communicate with each other over a decentralized Wi-Fi network
- The ESP8266 development board is used to communicate between sensors, and transmit alerts to inhabitants and authorities, which are transmitted to inhabitants through the mobile application If This Then That (IFTTT) as "recipes"
- Digital ports on the ESP8266 can also be used to trigger alarms and fire sprinklers, with a buffer circuit used to power the alarms

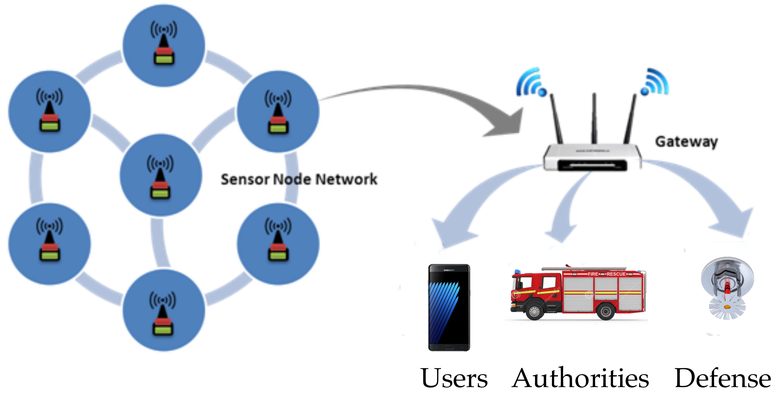

Figure 3: The wireless sensor network configuration [7]

Evaluation

- Although CLT costs 50% less than steel and concrete, it is twice as expensive as standard timber framing [8]
- Prefabricated CLT panels reduce on-site construction time [9]
- Multiple inexpensive panels can be combined to create one high quality panel, which reduces the overall cost
- Foundation costs less due to lightness of CLT [9]
- International Building Code (IBC) has only recently approved of CLT structures
- WSN-based sensor systems are already widely used and can be re-implemented easily
- The ESP8266 microcontroller is inexpensive at only $10 [10]
- IFTTT is already a popular platform and will be familiar with users

References

[1] "Featured Project," Barentshus Tower Norway 20 storeys tall timber, 27-Apr-2013. [Online]. Available: https://www.woodsolutions.com.au/blog/barentshus-tower-norway-20-storeys-tall-timber.
[2] B. Rimetz, "X Marks the Opportunity", *ProSales*, 2011. [Online]. Available: http://www.prosalesmagazine.com/products/lumber/x-marks-the-opportunity_o. [Accessed: 18- Oct- 2016].
[3] A. Sutton, P. Walker, and D. Black, "BRE Global," in *bre.co.uk*, 2011. [Online]. Available: http://www.bre.co.uk/filelibrary/pdf/projects/low_impact_materials/IP17_11.pdf. Accessed: Nov. 14, 2016.
[4] M. M., G. Sylvain, D. Bradford K. and P. Lisa, "Introduction to Cross Laminated Timber", 2016. [Online]. Available: http://www.forestprod.org/buy_publications/resources/untitled/summer2012/Volume%2022,%20Issue%202%20Mohammad.pdf.
[5] M. Fragiacomo, A. Menis, I. Clemente, G. Bochicchio, and A. Ceccotti, "Fire Resistance of Cross-Laminated Timber Panels Loaded Out of Plane." J. Struct. Eng., 10.1061/(ASCE)ST.1943-541X.0000787, 04013018, 2013.
[6] R. H. White and F. E. Woeste, "Post-Fire Analysis of Solid-Sawn Heavy Timber Beams," STRUCTURE magazine, Nov-2013. [Online]. Available: http://www.structuremag.org/?p=1129.[7] J. White, "Timber Trade Federation", Ttf.co.uk, 2015. [Online]. Available: http://ttf.co.uk/Media/Download.aspx?MediaId=99.
[7] J. White, "Timber Trade Federation", Ttf.co.uk, 2015. [Online]. Available: http://ttf.co.uk/Media/Download.aspx?MediaId=99.
[8] P. Crespell and C. Gaston, "The Value Proposition for Cross-Laminated Timber," pac.ca. [Online]. Available: http://www.fpac.ca/publications/value-clt-2011nabc anaylisfinal.pdf.
[9] G. Havel, "Cross-Laminated Timber Structures," *Fire Engineering*, vol. 159, no. 1, 2016.
[10] JayconSystems, "ESP8266 as a Microcontroller," Instructables.com, 2016. [Online]. Available: http://www.instructables.com/id/ESP8266-As-a-Microcontroller/.