SUBSONIC FLOW OVER A THIN AIRFOIL IN GROUND EFFECT: A FUNCTIONAL ANALYTIC APPROACH

by

Mohamed Ahmed Serry

A thesis presented to the Faculty of the

American University of Sharjah

College of Arts and Sciences

in Partial Fulfillment

of the Requirements

for the Degree of

Master of Science in

Mathematics

Sharjah, UAE

May 2017

© 2017 Mohamed Serry. All rights reserved.

Approval Signatures

We, the undersigned, approve the Master's Thesis of Mohamed Ahmed Serry.

Thesis Title: Subsonic Flow Over a Thin Airfoil in Ground Effect: a Functional Analytic Approach.

Signature	**Date of Signature**
_____	_____
Dr. Amjad Tuffaha Associate Professor Thesis Advisor	
_____	_____
Dr. Suheil Khoury Professor Thesis Committee Member	
_____	_____
Dr. Faruk Uygul Assistant Professor Thesis Committee Member	
_____	_____
Dr. Rim Gouia Assistant Professor Thesis Committee Member	
_____	_____
Dr. Hana Sulieman Head of the Department of Mathematics	
_____	_____
Dr. James Griffin CAS Graduate Programs Director	
_____	_____
Dr. Mahmoud Anabtawi Dean of CAS	
_____	_____
Dr. Khaled Assaleh Interim Vice Provost for Research and Graduate Studies	

Aknowledgments

The author of this work sincerely thanks his advisor (Dr. Amjad Tuffaha), committee members, and everyone who contributed to the development of this work.

Abstract

In this work, the problem of subsonic compressible flow over a thin airfoil located near the ground is studied. A singular integral equation, also known as the Possio integral equation [29], that relates the pressure jump along the airfoil to its downwash is derived. The derivation of the equation utilizes the Laplace transform, the Fourier transforms, the method of images, and the theory of Mikhlin multipliers. The existence and uniqueness of solutions to the Possio equation is verified for the steady state case through the concepts of the finite Hilbert operator, the Tricomi operator, and contraction mappings. Moreover, an approximate solution to the Possio equation, based on a linear approximation, is obtained. The aerodynamic loads are then calculated based on the approximate solution. Finally, the divergence speed of a continuum wing structure located near the ground is obtained based on the derived expressions of the aerodynamic loads.

Search Terms: Ground Effect, Tricomi Operator, Finite Hilbert Operator, Contraction Mapping, Possio Equation, Airfoil Equation, Aerodynamic Field Potential Equation

Contents

Abstract **5**

List of Figures **7**

1 Introduction **8**

2 Derivation of the Flow Governing Equation **11**

3 Derivation of the Possio Equation in the Fourier Domain **19**

4 Mikhlin Multipliers and the Possio Integral Equation **22**

5 The Possio Integral Equation for the Case k=0 **24**

6 Tricomi Operator and the Classical Airfoil Equation **27**

7 Existence and Uniqueness of Solutions to the Possio Equation for the Case k=0 **35**

8 Approximate Solution to the Possio Equation for the Case k=0 **38**

8.1 Lift and Moment Calculations 40

8.2 Divergence Speed 42

Conclusions and Future Work **45**

References **46**

Vita **50**

List of Figures

2.1 Air flow over a thin airfoil near the ground 12

3.1 The flow over the airfoil and its image in an open flow 20

8.1 General shape of the lift force profile as a function of the parameter c. 41

8.2 General shape of the moment profile as a function of the parameter c. 42

8.3 Wing configuration 43

1. Introduction

Aerodynamics is a classical subfield of fluid mechanics that is concerned with air flow over bodies and the interaction between these bodies and the air flow. In particular, the aim of aerodynamic studies is to obtain the air flow profile over the submerged bodies and the aerodynamic loads (aerodynamic forces and moments) exerted on these submerged bodies. Therefore, aerodynamic studies are essential in many important applications such as the design of commercial and high-performance aerial vehicles, commercial and racing automotive vehicles, wind turbines, and so on. In aerodynamic analyses, the bodies submerged in the air flow are assumed to be rigid. If these objects are deformable, then the aerodynamic loads deform the submerged bodies and, conversely, the deformations of the submerged bodies affect the air flow. This coupling between the submerged bodies' deformations and the air flow is considered in the field of *aeroelasticity* assuming that the deformations of the submerged bodies are elastic. Aeroelasticity is also concerned with studying the air movement within a domain with elastic boundaries. The knowledge of aeroelasticity is extremely important in the design of buildings, bridges, airplane's wings, and so on, to ensure the structural stability of these bodies when exposed to air flow.

In the last few decades, the fields of aerodynamics and aeroelasticity have bloomed significantly due to advances in computation power and experimentation. As a result, implementation of analytical methods, that require the use of rigorous mathematical concepts such as complex analysis, integral equations, operator theory, and so on, has receded slightly. Despite their sophistication and limitations to simplified aerodynamic and aeroelasic problems, analytical techniques have contributed significantly in the development of the fields of aerodynamics and aeroelasticity. An important example is the pioneering work of Theodorsen [37] who derived closed form expressions of the aerodynamic loads on thin deformable airfoils in incompressible potential flow using tools from complex analysis. Despite the relative simplicity of the expressions derived by Theodorsen, they have been intensively used by a significant number of researchers to study the aeroelastic stability and control of wing structures (see for example [5, 18, 24, 36]). Moreover, researchers have used Theodorsen's work as a

basis to develop more accurate aerodynamic models (see for example [20]). It must to be noted that there were also other early works, besides Theodorsen's work, that considered analytical expressions of aerodynamic loads in subsonic potential flow [22, 32, 39].

Another important example of implementing analytical tool in aerodynamics and aeroelasticity, which is a base of the ideas discussed in this work, is the relatively recent works of A.V. Balakrishnan. Balakrishnan has revived the interest in analytical techniques in aerodynamics and aeroelasticity (see for example: [6, 10, 11]) and, in particular, the Possio integral equation of aeroelasticity (a generalization of the classical airfoil equation). Balakrishnan has implemented functional analytic tools intensively to derive singular integral equations (Possio equations) from which the aerodynamic loads on thin airfoils in compressible potential flows can be obtained. These tools include the Laplace transform, the Fourier transform, and the theory of Mikhlin multipliers. Balakrishnan solved these singular integral equations, for special cases, by simply conducting rigorous and lengthy calculations that resulted in expressions, in the Laplace domain, of the aerodynamic loads on thin airfoils [13]. By implementing these expressions, Balakrishnan could move to conducting aeroelastic stability analysis on wing structures, represented by continuum models, by studying the aeroelastic modes of these wing structures. Consequently, Balakrishnan could calculate the important aeroelastic parameter, flutter speed, a speed at which the dynamics of wing structures start to become unstable [10]. In addition to implementing rigorous calculations to study aeroelastic problems, Balakrishnan conducted abstract studies on aeroelastic problems using concepts from functional analysis such as semigroups of operators [8]. Besides the works of Balakrishnan, there has been a series of recent mathematical works (see for example: [14, 15, 23, 28, 33, 34, 40]) which studied the mathematical aspects (existence, uniqueness, obtaining solutions, and stability) of different aerodynamic and aeroelastic problems. In conclusion, implementation of analytical techniques, despite their limitations and complexities, is still significant in studying different aerodynamic and aeroelastic phenomena.

One of the important aerodynamic phenomena that has received attention for many years and has been experimentally, numerically, and analytically studied by a significant number of researchers [1, 3, 21, 27, 41, 42] is *ground effect*. Ground effect

is an aerodynamic phenomenon that can be observed when a flying object is near the ground as the induced aerodynamic lift on the flying object becomes relatively high compared to the lift induced in an open flow [31]. This phenomenon, for example, is the base of operating hovercrafts as ground effect provides sufficient aerodynamic lifts that withstand the weight of the mentioned vehicles. Therefore, ground effect is very essential in the design and analysis of aerial vehicles that operate at low altitudes, and additionally the design of high-performance automotive vehicles.

Motivated by the significance of ground effect in many important applications, the author of this work proposes an analytical framework from which approximate formulas of the aerodynamic loads on a thin airfoil, located near the ground in a subsonic steady compressible potential flow, are obtained. The organization of this work is as follows. After the introduction, the derivation of the governing equation of subsonic compressible potential flow over a thin airfoil located near the ground is introduced with suitable boundary and initial conditions. After that, the derivation of an algebraic equation, in the Fourier domain, that relates some aerodynamic variables of interest, is discussed thoroughly. Using the properties of Fourier transforms, the representation of the mentioned algebraic equation as a singular integral equation, also known as the Possio equation [4], is discussed for the steady state case. Moreover, a thorough discussion about the existence and uniqueness of the derived Possio equation is introduced where concepts such as finite Hilbert operator, Tricomi operator, and contraction mapping theorem are implemented. Approximate solutions to the Possio equation are then obtained for the steady state case using simple linear approximation. After that, expressions of the aerodynamic loads on the airfoil are obtained based on the approximate solution of the Possio equation. Finally, an important aeroelastic parameter, divergence speed, is calculated for a continuum wing structure located near the ground in a steady compressible potential flow.

2. Derivation of the Flow Governing Equation

In this work, subsonic flow over a thin airfoil located near the ground is considered. The aim of this study is to derive formulas from which the aerodynamic loads on the airfoil can be calculated. The airfoil is described by the set $\Gamma = [-b, b] \times \{z = z_0\} \subset \mathbb{R}^+_{xz}$ at a distance $z_0 > 0$ from the ground $z = 0$ (see figure 2.1), and is subject to an airflow with a free stream velocity of U in the positive direction, so that $x = b$ signifies the trailing edge and $x = -b$ is the leading edge of the chord. In this chapter, the linearized governing equation of a compressible potential flow over the thin airfoil is derived. The derivation of the mentioned equation is obtained from the work of Balakrishnan in [12]. The starting point is the fundamental equations governing the mechanics and thermodynamics of a compressible inviscid ideal isentropic fluid. The first equation is the continuity equation which describes the conservation of mass of a compressible fluid and is given by

$$\frac{\partial \rho}{\partial t} + \nabla \cdot (\rho \mathbf{u}) = 0, \tag{2.1}$$

where ρ is the density of the fluid and $\mathbf{u}$ is the fluid velocity. Next, the momentum equation of an inviscid fluid (also known as the Euler equation) is introduced which is given by

$$\frac{\mathrm{D}\mathbf{u}}{\mathrm{D}t} + \frac{\nabla p}{\rho} = 0, \tag{2.2}$$

where the differential operator $\mathrm{D}(*)/\mathrm{D}t = \partial(*)/\partial t + (\mathbf{u} \cdot \nabla)(*)$ represents the total derivative with respect to time, and p is the fluid pressure. The previous equations describe the mechanics of a compressible inviscid fluid. As the density is variable for compressible fluids, thermodynamic relations need to be supplemented to well-define and simplify the flow problem. The thermodynamic relations are introduced based on the fact that the fluid is an ideal isentropic gas. The first thermodynamic relation is Gibb's relation which is given by

$$T\mathrm{d}s + \frac{\mathrm{d}p}{\rho} = \mathrm{d}h, \tag{2.3}$$

where s is the entropy, h is the enthalpy and T is the temperature. The isentropic assumption yields the relation

$$\mathrm{d}s = 0. \tag{2.4}$$

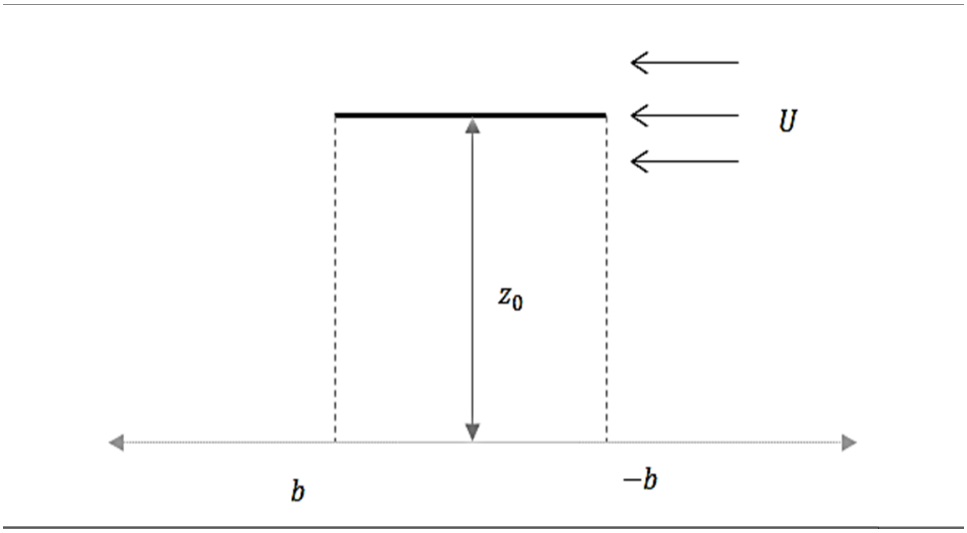

Figure 2.1: Air flow over a thin airfoil near the ground

For ideal gases, the enthalpy is related to the temperature through the relation

$$h = c_p T, \tag{2.5}$$

where c_p is the specific heat at constant pressure. Finally, the pressure, the density, and the temperature are related through the ideal gas equation

$$p = \rho R T, \tag{2.6}$$

where $R = c_p - c_v$ is the gas constant and c_v is the specific heat at constant volume. It has to be mentioned that the variables in the stated equations are assumed to not to vary significantly, in time or space, far from the airfoil. Therefore, the variables of the stated equations are assumed to have constant values far from the airfoil. This assumption is referred to as the free stream conditions and it is essential in the upcoming discussions.

Equations (2.1)-(2.6) well-define the flow problem over the airfoil, when appropriate initial and boundary conditions are supplemented, but they are difficult to deal with analytically. In the upcoming discussion, it is aimed to reduce the stated six governing equations to one governing equation that describes the dynamics of the flow of an isentropic ideal compressible fluid over a thin airfoil. Using equations (2.5) and (2.6), a direct relation between the enthalpy, the pressure and the density is obtained which is given by

$$h = \frac{c_p}{c_p - c_v}\frac{p}{\rho} = \frac{\gamma}{\gamma - 1}\frac{p}{\rho}, \tag{2.7}$$

where $\gamma = c_p/c_v$. Note that $\gamma > 1$ as $c_p > c_v$. Moreover, using the isentropic condition (2.4) and relation (2.3) results in

$$\nabla h = \frac{\nabla p}{\rho}. \tag{2.8}$$

Next, substituting equation (2.7) into equation (2.8) yields

$$\frac{\nabla p}{\rho} = \frac{\gamma}{\gamma - 1}\frac{\nabla p}{\rho} - \frac{\gamma}{\gamma - 1}\frac{p}{\rho^2}\nabla\rho. \tag{2.9}$$

After rearranging and simplifying relation (2.9), the following equation is obtained.

$$\gamma\frac{\nabla\rho}{\rho} = \frac{\nabla p}{p} \quad \text{or} \quad \frac{\nabla p}{p} - \gamma\frac{\nabla\rho}{\rho} = 0. \tag{2.10}$$

Equation (2.10) can be manipulated as the following.

$$\begin{aligned}\frac{\nabla p}{p} - \gamma\frac{\nabla\rho}{\rho} &= \nabla(\ln(p)) - \gamma\nabla(\ln(\rho)) \\ &= \nabla(\ln(p)) - \nabla(\ln(\rho^\gamma)) \\ &= \nabla\left(\ln\left(\frac{p}{\rho^\gamma}\right)\right) \\ &= 0.\end{aligned} \tag{2.11}$$

Equation (2.11) implies that the term $\ln(p/\rho^\gamma)$ does not change within the fluid flow and therefore it is concluded that

$$\ln\left(\frac{p}{\rho^\gamma}\right) = \ln\left(\frac{p_\infty}{\rho_\infty^\gamma}\right),$$

where p_∞ is the free stream pressure and ρ_∞ is the free stream density. From the previous relation, a power law that relates the pressure to the density is obtained which is given by

$$p = \left(\frac{\rho}{\rho_\infty}\right)^\gamma p_\infty. \tag{2.12}$$

Differentiating equation (2.12) with respect to ρ and using (2.12) to result in

$$\frac{\mathrm{d}p}{\mathrm{d}\rho} = \gamma\frac{\rho^{\gamma-1}}{\rho_\infty^\gamma}p_\infty = \gamma\frac{p}{\rho}.$$

Next, the term, speed of sound a, is introduced by relating it to the above equation through the relation

$$a^2 = \frac{\mathrm{d}p}{\mathrm{d}\rho} = \gamma\frac{p}{\rho}$$

and for the free stream conditions, the above relation becomes

$$a_\infty^2 = \gamma \frac{p_\infty}{\rho_\infty} \tag{2.13}$$

where a_∞ is the free stream speed of sound. Next, the assumption of potential flow is introduced in the governing equations which is given by

$$\mathbf{u} = \nabla \phi. \tag{2.14}$$

Note that the potential flow assumption can be deduced from the isentropic condition but that is omitted in this discussion. Next, equation (2.8) is substituted into equation (2.2) to result in

$$\frac{\mathrm{D}\mathbf{u}}{\mathrm{D}t} + \nabla h = \frac{\partial \mathbf{u}}{\partial t} + (\mathbf{u} \cdot \nabla)(\mathbf{u}) + \nabla h = 0, \tag{2.15}$$

where the term $(\mathbf{u} \cdot \nabla)(\mathbf{u})$ can be written as

$$(\mathbf{u} \cdot \nabla)(\mathbf{u}) = \nabla \left(\frac{|\mathbf{u}|^2}{2} \right) - \mathbf{u} \times \nabla \times \mathbf{u}.$$

Substituting the above identity and equation (2.14) into equation (2.15) and using the fact that $\nabla \times \nabla \phi = \mathbf{0}$ result in

$$\frac{\partial \nabla \phi}{\partial t} + \nabla \left(\frac{|\nabla \phi|^2}{2} \right) + \nabla h = \nabla \left(\frac{\partial \phi}{\partial t} + \frac{|\nabla \phi|^2}{2} + h \right) = 0,$$

and from the above equation, it is deduced that

$$\frac{\partial \phi}{\partial t} + \frac{|\nabla \phi|^2}{2} + h = \frac{|\mathbf{u}_\infty|^2}{2} + h_\infty, \tag{2.16}$$

where $\mathbf{u}_\infty$ is the free stream velocity and h_∞ is the free stream enthalpy. Substituting equations (2.7), (2.12), and (2.13) into equation (2.16) results in the Bernoulli equation

$$\frac{\partial \phi}{\partial t} + \frac{|\nabla \phi|^2}{2} + \frac{a_\infty^2}{\gamma - 1} \left(\frac{\rho}{\rho_\infty} \right)^{\gamma - 1} = \frac{|\mathbf{u}_\infty|^2}{2} + \frac{a_\infty^2}{\gamma - 1},$$

or

$$\left(\frac{\rho}{\rho_\infty} \right)^{\gamma - 1} = 1 + \frac{\gamma - 1}{a_\infty^2} \left[\frac{|\mathbf{u}_\infty|^2}{2} - \frac{|\nabla \phi|}{2} - \frac{\partial \phi}{\partial t} \right]. \tag{2.17}$$

Next, differentiating $\rho^{\gamma - 1}$ with respect to time and using equation (2.17) result in

$$\frac{\partial \rho^{\gamma - 1}}{\partial t} = (\gamma - 1) \rho^{\gamma - 2} \frac{\partial \rho}{\partial t} = \rho_\infty^{\gamma - 1} \frac{\gamma - 1}{a_\infty^2} \left[-\frac{\partial^2 \phi}{\partial t^2} - \frac{\partial}{\partial t} \frac{|\nabla \phi|^2}{2} \right], \tag{2.18}$$

or

$$a_\infty^2 \rho^{\gamma-2} \frac{\partial \rho}{\partial t} = \rho_\infty^{\gamma-1} \left[-\frac{\partial^2 \phi}{\partial t^2} - \frac{\partial}{\partial t} \frac{|\nabla \phi|^2}{2} \right]. \tag{2.19}$$

Using the continuity equation (2.1), the term $\rho^{\gamma-2} \frac{\partial \rho}{\partial t}$ can be written as

$$\begin{aligned} \rho^{\gamma-2} \frac{\partial \rho}{\partial t} &= -\rho^{\gamma-2} \left(\rho \Delta \phi + \nabla \phi \cdot \nabla \rho \right) \\ &= -\rho^{\gamma-1} \Delta \phi - \nabla \phi \cdot \left(\rho^{\gamma-2} \nabla \rho \right) \\ &= -\rho^{\gamma-1} \Delta \phi - \nabla \phi \cdot \frac{\nabla \rho^{\gamma-1}}{\gamma - 1}. \end{aligned} \tag{2.20}$$

Substituting equation (2.20) into equation (2.19), dividing by $\rho_\infty^{\gamma-1}$, and using equations (2.17) and (2.18) result in

$$\begin{aligned} \frac{\partial^2 \phi}{\partial t^2} + \frac{\partial}{\partial t} \frac{|\nabla \phi|^2}{2} &= a_\infty^2 \left[\left(\frac{\rho}{\rho_\infty} \right)^{\gamma-1} \Delta \phi + \frac{\nabla \phi \cdot \nabla \left(\frac{\rho}{\rho_\infty} \right)^{\gamma-1}}{\gamma - 1} \right] \\ &= a_\infty^2 \Delta \phi \left(1 + \frac{\gamma - 1}{a_\infty^2} \left[\frac{|\mathbf{u}_\infty|^2}{2} - \frac{|\nabla \phi|^2}{2} - \frac{\partial \phi}{\partial t} \right] \right) \\ &- \nabla \phi \cdot \nabla \left(\frac{\partial \phi}{\partial t} + \frac{|\nabla \phi|^2}{2} \right). \end{aligned} \tag{2.21}$$

Finally, Using the fact that

$$\nabla \phi \cdot \nabla \left(\frac{\partial \phi}{\partial t} \right) = \frac{\partial}{\partial t} \frac{|\nabla \phi|^2}{2}$$

simplifies equation (2.21) to the full potential equation

$$\begin{aligned} \frac{\partial^2 \phi}{\partial t^2} + \frac{\partial}{\partial t} |\nabla \phi|^2 &= a_\infty^2 \Delta \phi \left(1 + \frac{\gamma - 1}{a_\infty^2} \left[\frac{|\mathbf{u}_\infty|^2}{2} - \frac{|\nabla \phi|^2}{2} - \frac{\partial \phi}{\partial t} \right] \right) \\ &- \nabla \phi \cdot \nabla \left(\frac{|\nabla \phi|^2}{2} \right). \end{aligned} \tag{2.22}$$

Unfortunately, equation (2.22) is extremely nonlinear and difficult to analyze. Therefore, simplifications are introduced to the mentioned equation while keeping the main characteristics of the fluid flow (transitory and compressibility) present. First, suiting the problem discussed in this work, Cartesian coordinates are used. The flow is assumed to be two dimensional (x and z variables) using the assumption of typical section theory which is valid for wings with high aspect ratios. Moreover, the free stream velocity is assumed to be horizontal. Therefore,

$$\mathbf{u}_\infty = U \hat{\mathbf{i}}. \tag{2.23}$$

Furthermore, the effect of the airfoil movement is assumed to be small compared to the free stream velocity. Therefore, the flow potential is decomposed linearly into a free stream potential $\phi_\infty = Ux$ and a disturbance potential $\tilde{\phi}$ as the following.

$$\phi = Ux + \tilde{\phi}. \tag{2.24}$$

As mentioned previously, the free stream velocity is dominant, therefore, the assumption

$$\frac{|\mathbf{u}_\infty|^2}{2} \approx \frac{|\nabla\phi|^2}{2} \tag{2.25}$$

is used to simplify equation (2.22). Moreover, the term $\partial|\nabla\phi|^2/\partial t$ can be approximated as the following.

$$|\nabla\phi|^2 = \left(U + \frac{\partial\tilde{\phi}}{\partial x}\right)^2 + \left(\frac{\partial\tilde{\phi}}{\partial z}\right)^2$$

$$\Rightarrow \frac{\partial}{\partial t}|\nabla\phi|^2 = 2\left(U + \frac{\partial\tilde{\phi}}{\partial x}\right)\frac{\partial^2\tilde{\phi}}{\partial x\partial t} + 2\frac{\partial\tilde{\phi}}{\partial z}\frac{\partial^2\tilde{\phi}}{\partial z\partial t} \approx 2U\frac{\partial^2\tilde{\phi}}{\partial x\partial t}. \tag{2.26}$$

In a similar fashion, the term $\nabla\phi\cdot\nabla\left(|\nabla\phi|^2/2\right)$ can be approximated as

$$\nabla\phi\cdot\nabla\left(\frac{|\nabla\phi|^2}{2}\right) \approx U^2\frac{\partial^2\tilde{\phi}}{\partial x^2}. \tag{2.27}$$

Using assumptions (2.23)-(2.27) in equation (2.22) and omitting any remaining non-linear terms result in

$$\frac{\partial^2\tilde{\phi}}{\partial t^2} + 2U\frac{\partial^2\tilde{\phi}}{\partial x\partial t} = a_\infty^2\left(\frac{\partial^2\tilde{\phi}}{\partial x^2} + \frac{\partial^2\tilde{\phi}}{\partial z^2}\right) - U^2\frac{\partial^2\tilde{\phi}}{\partial x^2}. \tag{2.28}$$

Finally, using ϕ instead of $\tilde{\phi}$ for the disturbance potential and introducing the Mach number M, defined as $M = U/a_\infty$ and has a range of values between zero and one for subsonic flows, to equation (2.28) result in

$$\frac{\partial^2\phi}{\partial t^2} + 2Ma_\infty\frac{\partial^2\phi}{\partial x\partial t} = a_\infty^2(1-M^2)\frac{\partial^2\phi}{\partial x^2} + a_\infty^2\frac{\partial^2\phi}{\partial z^2}. \tag{2.29}$$

Equation (2.29) is called transonic small disturbance (TSD) potential equation and it will be the base for the upcoming discussions in this work.

Remark (Perturbation analysis)**.** *It has to be mentioned that the previous discussion of the derivation of equation* (2.29) *is an informal version of the method of perturbation analysis where the flow potential is given by the perturbation expansion* $\phi(\varepsilon) = \sum_{n=0}^{\infty}\phi_n\varepsilon^n$, *with* $\phi_0 = Ux$ *such that the expansion is substituted in the full potential equation* (2.22) *and the first order terms only are considered.*

The assumption of potential flow neglects the effects of the boundary layer which become significant when the airfoil is very close to the ground. Therefore, the implementation of the theory discussed in this work is valid for thin airfoils that are at elevation ranges in which the boundary layer effects are small but the ground effect is still present. Additionally, equation (2.29) is valid for ranges of Mach number between 0 and 0.7 [25].

The interaction between the airfoil and the flow is obtained by introducing equations and boundary conditions that relate the airfoil movement, directly or indirectly, to the fluid pressure. As the airfoil has a zero thickness, the fluid pressure will be discontinuous along the airfoil chord. Therefore, there will be a pressure jump along the airfoil chord and that will induce the aerodynamic loads on the airfoil. To calculate the pressure jump along the airfoil, a reasonable approximation in terms of the acceleration potential $\psi(x, z, t)$ is used where

$$\psi = \frac{\partial \phi}{\partial t} + U \frac{\partial \phi}{\partial x}. \tag{2.30}$$

The pressure jump term $A(x, t)$ is then defined by

$$A = -\frac{\Delta \psi}{U}, \tag{2.31}$$

where

$$\Delta \psi = \psi(z_0^+) - \psi(z_0^-).$$

Equation (2.29) is supplemented with the following boundary conditions which describe zero normal velocity at the ground, matching normal flow-structure velocity on the airfoil (flow tangency), zero pressure jump off the wing (Kutta -Joukowski condition), zero pressure jump at the trailing edge of the airfoil (Kutta condition), and vanishing disturbance potential far from the airfoil.

$$\begin{aligned}
\text{Zero normal velocity at the ground:} \quad & \frac{\partial \phi}{\partial z} = 0, \ z = 0, \\
\text{Flow tangency condition:} \quad & \frac{\partial \phi}{\partial z} = w_a, \quad z = z_0 \ \text{ and } \ |x| \leq b, \\
\text{Kutta-Joukowski condition:} \quad & A(x, t) = 0, \ |x| > b, \\
\text{Kutta condition:} \quad & \lim_{x \to b^-} A(x, t) = 0, \\
\text{Vanishing disturbance potential at infinity :} \quad & \lim_{x \to \pm\infty, z \to \infty} \phi(x, z, t) = 0,
\end{aligned} \tag{2.32}$$

where $w_a(x,t)$ is the downwash or the normal velocity on the airfoil surface. The downwash $w_a(x,t)$ is the term that will account for the airfoil movement in this study. Note that the Kutta condition in (2.32) ensures the uniqueness of solution to the problem under consideration as shall be discussed in the later chapters. Finally, the initial conditions of equation (2.29) are set to be

$$\frac{\partial}{\partial t}\phi(x,z,t)\bigg|_{t=0} = \phi(x,z,0) = 0. \tag{2.33}$$

In the next chapter, equation (2.29) and its boundary and initial conditions are manipulated to deduce an algebraic equation in the Fourier domain that relates the pressure jump A to the normal velocity $v = \partial\phi/\partial z$ at a distance z_0 from the ground.

3. Derivation of the Possio Equation in the Fourier Domain

In this chapter, an algebraic equation, in the Fourier domain, that relates the pressure jump to the normal velocity at a distance z_0 from the ground is derived. The derivation process starts with applying the Laplace transform in the t variable and the Fourier transform in the x variable to both sides of equation (2.29) to obtain

$$\lambda^2\hat{\hat{\phi}} + 2Ma_\infty i\omega\lambda\hat{\hat{\phi}} = -a_\infty^2(1-M^2)\omega^2\hat{\hat{\phi}} + a_\infty^2\frac{\partial^2\hat{\hat{\phi}}}{\partial z^2}, \tag{3.1}$$

where $\hat{f}(x,z,\lambda) = \int_0^\infty e^{-\lambda t} f(x,z,t)\,dt$ is the Laplace transform, where $Re(\lambda) \geq \sigma > 0$, and $\hat{\hat{f}}(\omega,z,\lambda) = \int_{-\infty}^{\infty} e^{-i\omega x}\hat{f}(x,z,\lambda)\,dx$ is the Fourier transform. It is very important to mention that all the improper integrals in this work are evaluated in the sense of *Cauchy principal values*. Rearranging equation (3.1) results in

$$\frac{\partial^2\hat{\hat{\phi}}}{\partial z^2} = B(\omega,k)\hat{\hat{\phi}}, \tag{3.2}$$

where $B(\omega,k) = M^2(k+i\omega)^2 + \omega^2$ and $k = \frac{\lambda}{U}$ is the reduced frequency. The function $B(\omega,k)$ is never zero. To show that, the function $B(\omega,k)$ can be rewritten as

$$\begin{aligned} B(\omega,k) = &\left[M^2(Re(k)^2 - Im(k)^2) - 2M^2\omega Im(k) + (1-M^2)\omega^2\right] \\ &+ [Im(k)+\omega]2M^2Re(k)i. \end{aligned}$$

Since $Re(k) \geq \sigma/U > 0$, the imaginary part of $B(\omega,k)$ is not equal to zero unless $Im(k) = -\omega$ and in that case $B(\omega,k)$ becomes

$$B(\omega,k) = M^2(Re(k)^2 + \omega^2) + (1-M^2)w^2$$

which is positive as $0 \leq M < 1$ for subsonic flows. It is important to have the function $B(\omega,k)$ non-vanishing to guarantee obtaining decaying solutions to the flow problem as illustrated in the following discussion.

Taking an advantage of the linearity of the flow problem, the method of images is implemented in this study to account for the ground effect (see figure (3.1)). The method assumes an open flow (no ground) and an image of the airfoil to be located

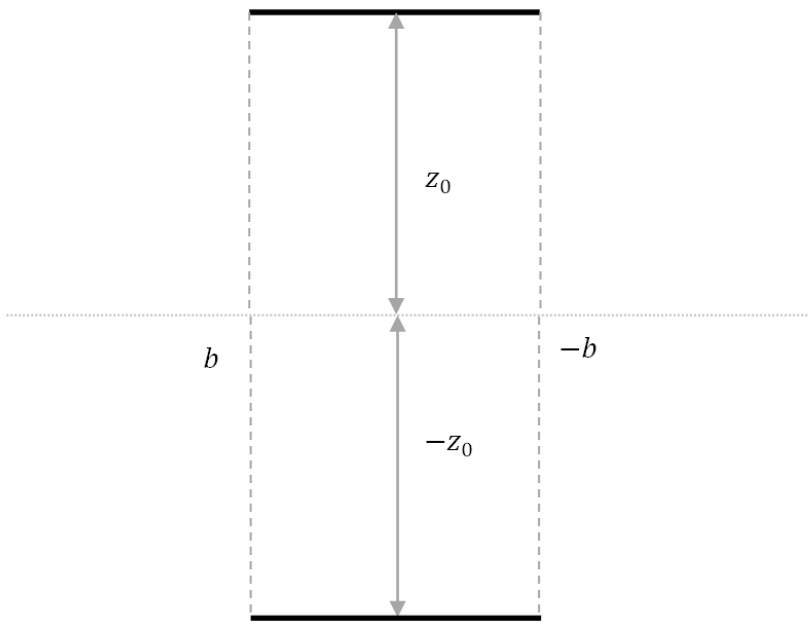

Figure 3.1: The flow over the airfoil and its image in an open flow

at a distance $-z_0$ from the ground axis. Due to the linearity of equation (3.2), the solution of the flow problem is obtained by studying the open flow over the airfoil and its image separately. The separate solutions are given by

$$\hat{\hat{\phi}}_{airfoil} = \begin{cases} \hat{\hat{\phi}}(z_0^+)e^{-\sqrt{B(\omega,k)}(z-z_0)}, & z > z_0 \\ \hat{\hat{\phi}}(z_0^-)e^{\sqrt{B(\omega,k)}(z-z_0)}, & z < z_0 \end{cases} \quad \hat{\hat{\phi}}_{image} = \begin{cases} \hat{\hat{\phi}}(z_0^-)e^{-\sqrt{B(\omega,k)}(z+z_0)}, & z > -z_0 \\ \hat{\hat{\phi}}(z_0^+)e^{\sqrt{B(\omega,k)}(z+z_0)}, & z < -z_0 \end{cases},$$

where $\sqrt{*}$ is the square root with a positive real part. Consequently, by implementing the superposition principle, the solution to equation (3.2) is given by

$$\hat{\hat{\phi}} = \hat{\hat{\phi}}_{airfoil} + \hat{\hat{\phi}}_{image}. \tag{3.3}$$

By differentiating equation (3.3) with respect to z, the normal velocities about the axis $z = z_0$, denoted by $\hat{\hat{v}}_+$ and $\hat{\hat{v}}_-$, are obtained and are given by

$$\hat{\hat{v}}_+ = -\sqrt{B(\omega,k)}\left(\hat{\hat{\phi}}(z_0^+) + \hat{\hat{\phi}}(z_0^-)e^{-2\sqrt{B(\omega,k)}z_0}\right), \tag{3.4}$$

$$\hat{\hat{v}}_- = \sqrt{B(\omega,k)}\hat{\hat{\phi}}(z_0^-)\left(1 - e^{-2\sqrt{B(\omega,k)}z_0}\right). \tag{3.5}$$

The solution to the flow problem should ensure the continuity of the velocity field and therefore, $\hat{\hat{v}}_+ = \hat{\hat{v}}_- = \hat{\hat{v}}$. Using the equations in (3.4) and (3.5), the difference in $\hat{\hat{\phi}}(z_0^+)$ and $\hat{\hat{\phi}}(z_0^-)$ is expressed in terms of $\hat{\hat{v}}$ as

$$\hat{\hat{\phi}}(z_0^+) - \hat{\hat{\phi}}(z_0^-) = \frac{-2}{\sqrt{B(\omega,k)}\left(1 - e^{-2\sqrt{B(\omega,k)}z_0}\right)}\hat{\hat{v}}. \tag{3.6}$$

Next, the Fourier and the Laplace Transforms are applied to the acceleration potential in (2.30) and the pressure jump term in (2.31) to obtain

$$\hat{\hat{\psi}} = (\lambda + iU\omega)\hat{\hat{\phi}}, \tag{3.7}$$

$$\hat{\hat{A}} = -\frac{\Delta\hat{\hat{\psi}}}{U}. \tag{3.8}$$

Using equations (3.6) and (3.7), the pressure jump term $\hat{\hat{A}}$ is represented in terms of the normal velocity $\hat{\hat{v}}$ as

$$\hat{\hat{A}} = \frac{2(k + i\omega)}{\sqrt{B(\omega, k)}\left(1 - e^{-2\sqrt{B(\omega,k)}z_0}\right)}\hat{\hat{v}}.$$

Rearranging the above equation yields

$$\hat{\hat{v}} = \frac{\sqrt{B(\omega, k)}\left(1 - e^{-2\sqrt{B(\omega,k)}z_0}\right)}{2(k + i\omega)}\hat{\hat{A}}. \tag{3.9}$$

Equation (3.9) is the desired algebraic equation that relates the pressure jump to the normal velocity at z_0 in the Fourier domain. The algebraic equation is referred to as the Possio equation in the Fourier domain. The next step is to obtain an integral equation (a Possio integral equation), based on equation (3.9), that relates the pressure jump along the airfoil to the airfoil downwash. To accomplish this, the theory of Mikhlin multipliers is introduced and implemented in the next chapter.

4. Mikhlin Multipliers and the Possio Integral Equation

In this chapter, the necessary definition and theory of Mikhlin multipliers used in this work are presented. The readers are refereed to [26] for detailed discussions and proofs.

Definition 4.0.1. Let f and g be two functions in $L^p(-\infty,\infty)$ where $p > 1$ (a function f is in a Banach space $L^p[a_1, a_2]$ where $a_1 < a_2$ and $a_1, a_2 \in \mathbb{R} \cup \{\pm\infty\}$ if $\int_{a_1}^{a_2} |f(x)|^p dx < \infty$) and let their Fourier transforms F and G be related by

$$G(\omega) = \mu(\omega)F(\omega),$$

where the multiplier μ is C^1 (continuously differentiable) and satisfies

$$|\mu(\omega)| + |\omega\mu^{'}(\omega)| < C_p < \infty$$

for all ω except maybe at $\omega = 0$ where C_p is a positive constant that depends on p. Then, μ is called a Mikhlin multiplier.

Theorem 4.0.1. *If f and g are two functions defined and related as in definition 4.0.1, then there exists a bounded linear operator $T : L^p(-\infty,\infty) \to L^p(-\infty,\infty)$ where $p > 1$ such that $g = T(f)$ [26].*

Equipped with definition 4.0.1 and theorem 4.0.1, the next step is to show that the multiplier $\sqrt{B(\omega,k)}(1 - e^{-2\sqrt{B(\omega,k)}z_0})/(2(k + i\omega))$ in equation (3.9), which is denoted by $\gamma(\omega, k)$, is a Mikhlin multiplier and therefore a Possio integral equation based on equation (3.9) can be obtained.

Theorem 4.0.2. *$\gamma(\omega)$ is a Mikhlin multiplier.*

Proof. $\gamma(\omega)$ can be written as $\gamma(\omega) = \alpha(\omega)\beta(\omega)$ where $\alpha(\omega) = \sqrt{B(\omega,k)}/(2(k+i\omega))$ and $\beta(\omega) = 1 - e^{-2\sqrt{B(\omega,k)}z_0}$. It was shown in [9] that $\alpha(\omega)$ is a Mikhlin multiplier. Therefore, it remains to show that $\beta(\omega)$ is a Mikhlin multiplier as the multiplication of two Miklin multipliers is also a Mikhlin multiplier. The term $|\beta(\omega)|$ satisfies the estimate

$$|\beta(\omega)| = |1 - e^{-2\sqrt{B(\omega,k)}z_0}| \leq 2. \tag{4.1}$$

Moreover, the term $|\omega\beta^{'}(\omega)|$ can be written as

$$\left|\omega\beta^{'}(\omega)\right| = \frac{\left|\omega B^{'}(\omega,k)\right|}{\left|z_0\sqrt{B(\omega,k)}\right|}\left|e^{-2\sqrt{B(\omega,k)}z_0}\right|. \tag{4.2}$$

For a fixed value of k, it can be verified, by calculations that are omitted in this work, that

- $\left|\omega B^{'}(\omega,k)\right|$ is asymptotically equivalent to $2(1-M^2)\omega^2$.
- $\left|\sqrt{B(\omega,k)}\right|$ is asymptotically equivalent to $\sqrt{1-M^2}|\omega|$.
- $\left|e^{-2\sqrt{B(\omega,k)}z_0}\right|$ is asymptotically equivalent to $e^{-2z_0\sqrt{1-M^2}|\omega|}$.
- Therefore, $|\omega\beta^{'}(\omega)|$ is continuous, except at $\omega = 0$, and has convergent limits at infinity, and hence $|\omega\beta^{'}(\omega)|$ is bounded.

Therefore, $\beta(\omega)$ is a Mikhlin multiplier. □

Based on the previous discussion, there exists a bounded linear operator $T : L^p(-\infty,\infty) \to L^p(-\infty,\infty)$ corresponding to equation (3.9) such that

$$\hat{v} = T(\hat{A}). \tag{4.3}$$

Applying the projection operator $\mathcal{P} : L^p(-\infty,\infty) \to L^p[-b,b]$ to both sides of equation (4.3) results in

$$\hat{w}_a = \mathcal{P}T(\hat{A}), \tag{4.4}$$

which is the Possio integral equation that relates the pressure jump to the downwash. The existence and uniqueness of solution to equation (4.4) depends on the properties of the operator T. In the upcoming chapter, the existence and uniqueness of solution to equation (4.4) is discussed for the steady state case.

5. The Possio Integral Equation for the Case k=0

In this chapter, an explicit expression for the Possio integral equation deduced from equation (3.9) is considered for the case $k = 0$, which corresponds to the steady state case. Solving the Possio integral equation for the steady state case is essential for the static and steady-state analyses of thin wing structures. Setting $k = 0$ in equation (3.9) results in

$$\hat{\hat{v}} = \frac{\sqrt{1-M^2}|\omega|\left(1 - e^{-2\sqrt{1-M^2}|\omega|z_0}\right)}{2i\omega}\hat{\hat{A}}. \tag{5.1}$$

The construction of the Possio integral equation is based on breaking the multiplier in (5.1) into simpler multipliers and then using Fourier transform tables to conclude a correspondence between the simple multipliers and some integral operators. For example, the multiplier $|\omega|/i\omega$ corresponds to the Hilbert operator $\mathcal{H}$ which is defined as

$$\mathcal{H}(f(\tau))(t) = \frac{1}{\pi}\int_{-\infty}^{\infty} \frac{f(\tau)}{t-\tau}\, d\tau. \tag{5.2}$$

This is due to the fact that the Fourier transform of the function $f(x) = 1/x$ is given by $F(\omega) = |\omega|/(i\omega)$. Hilbert operator or Hilbert transform appears frequently in many mathematical fields such as complex analysis [38] and functional analysis [30]. Moreover, Hilbert operator is of a big significance in engineering applications especially in signal processing [19] and mechanical vibrations [17]. The multiplier $e^{-2\sqrt{1-M^2}|\omega|z_0}$ corresponds to the integral operator $\mathcal{L}$ that is defined by

$$\mathcal{L}(f(\tau))(t) = \frac{1}{\pi c}\int_{-\infty}^{\infty} \frac{f(\tau)}{1+(\frac{t-\tau}{c})^2}\, d\tau, \tag{5.3}$$

where

$$c = 2z_0\sqrt{1-M^2}.$$

Note that the parameter c plays an essential role in the existence of solution argument. Based on equation (5.1), the operators defined in (5.2) and (5.3), and applying the projection operator $\mathcal{P} : L^p(-\infty,\infty) \to L^p[-b,b]$, the following integral equation is obtained.

$$\frac{2}{\sqrt{1-M^2}} w_a = \mathcal{P}\mathcal{H}(\mathcal{I}-\mathcal{L})A, \tag{5.4}$$

where $\mathcal{I}$ is the identity operator. Note that A vanishes off the airfoil chord according to the Kutta-Joukowski condition, therefore $A = \mathcal{P}A$. Additionally, the operators $\mathcal{H}$ and $(\mathcal{I}-\mathcal{L})$ commute as their product in the Fourier domain correspond to a Mikhlin multiplier. Implementing the above points and using the distributive property of operators in equation (5.4) result in

$$\frac{2}{\sqrt{1-M^2}} w_a = \mathcal{P}\mathcal{H}\mathcal{P}A - \mathcal{P}\mathcal{L}\mathcal{H}\mathcal{P}A.$$

The operator $\mathcal{L}\mathcal{H}\mathcal{P}$ is given by

$$\mathcal{L}\mathcal{H}\mathcal{P}(f(\tau))(x) = \frac{1}{\pi c}\int_{-\infty}^{\infty} \frac{1}{1+\left(\frac{x-t}{c}\right)^2}\left(\frac{1}{\pi}\int_{-b}^{b}\frac{f(\tau)}{t-\tau}d\tau\right)dt. \tag{5.5}$$

Changing the order of integration in (5.5) results in

$$\mathcal{L}\mathcal{H}\mathcal{P}(f(\tau))(x) = \frac{-1}{\pi c}\int_{-b}^{b} f(\tau)\left(\frac{1}{\pi}\int_{-\infty}^{\infty}\frac{1}{\tau-t}\frac{1}{1+\left(\frac{t-x}{c}\right)^2}dt\right)d\tau. \tag{5.6}$$

The integral between brackets in (5.6) corresponds to the Hilbert operator applied to

$$h(t) = \frac{1}{1+\left(\frac{t-x}{c}\right)^2}.$$

Note that

$$\mathcal{H}\left(\frac{1}{1+\tau^2}\right)(t) = \frac{t}{1+t^2}$$

and that

$$\mathcal{H}\left(f\left(\frac{\tau-x}{c}\right)\right)(t) = \mathcal{H}(f(\tau))\left(\frac{t-x}{c}\right).$$

Therefore, $\mathcal{P}\mathcal{L}\mathcal{H}\mathcal{P}$ can be written as

$$\mathcal{P}\mathcal{L}\mathcal{H}\mathcal{P}(f(\tau))(x) = \frac{-1}{\pi c}\int_{-b}^{b} f(\tau) g\left(\frac{\tau-x}{c}\right)d\tau, \quad |x| \le b, \tag{5.7}$$

where

$$g(t) = \frac{t}{1+t^2}.$$

Note that changing the integration order in the previous steps can be verified by using order of integration theorems or by the simple fact that the Fourier transform of the function

$$f(x) = \frac{1}{\pi}\frac{x^2}{x^2+c^2}$$

is given by

$$F(\omega) = -\frac{|\omega|}{i\omega}e^{-c|\omega|}.$$

The operator $\mathcal{PHP}$ corresponds to the finite Hilbert operator $\mathcal{H}_b$ which is given by

$$\mathcal{H}_b(f(\tau))(t) = \frac{1}{\pi}\int_{-b}^{b} \frac{f(\tau)}{t-\tau}\, d\tau, \quad |t| \leq b. \tag{5.8}$$

Finally, the Possio integral equation has the form

$$\frac{2}{\sqrt{1-M^2}} w_a = (\mathcal{H}_b - \mathcal{PLHP})A. \tag{5.9}$$

In the next two chapters, the solvability of equation (5.9) is discussed thoroughly.

6. Tricomi Operator and the Classical Airfoil Equation

In this work, the Tricomi operator $\mathcal{T}$ defined by

$$\mathcal{T}(f(\tau))(x) := \frac{1}{\pi}\sqrt{\frac{b-x}{b+x}}\int_{-b}^{b}\sqrt{\frac{b+\tau}{b-\tau}}\frac{f(\tau)}{\tau-x}\,d\tau, \quad |x| \leq b, \tag{6.1}$$

is used as an inversion formula of the finite Hilbert operator. In the following discussion in this chapter, the existence and uniqueness of solution to the classical airfoil equation, $f = \mathcal{H}_b(g)$, on a certain class of Banach spaces is verified. Moreover, the boundedness of the Tricomi operator is illustrated. These two points are essential in the later discussion about the existence and uniqueness of solution to equation (5.9). It has to be mentioned that in the upcoming discussions, the notation L^{p_0+} of a Banach space L^p with $p > p_0$ is sometimes used to avoid tediousness. Similarly, the notation L^{p_0-} of a Banach space L^p with $1 < p < p_0$ is also used. In the following lemma, the existence of solutions to the classical airfoil equation is discussed which is a classical result due to Sohngen and Tricomi [35, 38].

Lemma 6.0.1. *Given $f \in L^p[-b,b]$ with $p > 4/3$ there exists a solution $g \in L^r[-b,b]$ with $1 < r < 4/3$ to the classical airfoil equation*

$$\mathcal{H}_b(g) = f, \tag{6.2}$$

where $\mathcal{H}_b$ is given by (5.8). Moreover, the solution g has the form

$$g(x) = \frac{1}{\pi}\int_{-b}^{b}\sqrt{\frac{b^2-y^2}{b^2-x^2}}\frac{f(y)}{y-x}\,dy + \frac{C}{\sqrt{b^2-x^2}}, \tag{6.3}$$

with C being an arbitrary constant.

Proof. The proof is based on using the convolution identity of the finite Hilbert operator [38] given by

$$\mathcal{H}_b\left(f_1\mathcal{H}_b(f_2) + f_2\mathcal{H}_b(f_1)\right) = \mathcal{H}_b(f_1)\mathcal{H}_b(f_2) - f_1 f_2, \tag{6.4}$$

where $f_1 \in L^{p_1}[-b,b]$ and $f_2 \in L^{p_2}[-b,b]$ such that $1/p_1 + 1/p_2 < 1$. The derivation of the solution expression starts with the fact that

$$\mathcal{H}_b\left(\sqrt{b^2-y^2}\right)(x) = x. \tag{6.5}$$

Substituting $f_1 = g$ and $f_2 = \sqrt{b^2 - x^2}$ in equation (6.4) and using equations (6.2) and (6.5) result in

$$\mathcal{H}_b(yg(y) + \sqrt{b^2 - y^2} f(y))(x) = xf(x) - \sqrt{b^2 - x^2} g(x). \tag{6.6}$$

But

$$\begin{aligned}
\mathcal{H}_b(yg(y))(x) &= \frac{1}{\pi} \int_{-b}^{b} \frac{yg(y)}{x - y} dy \\
&= \frac{1}{\pi} \int_{-b}^{b} \frac{(y - x + x)g(y)}{x - y} dy \\
&= x \frac{1}{\pi} \int_{-b}^{b} \frac{g(y)}{x - y} dy - \frac{1}{\pi} \int_{-b}^{b} g(y) dy \\
&= \mathcal{H}_b(g)(x) - \frac{1}{\pi} \int_{-b}^{b} g(y) dy \\
&= xf(x) - \frac{1}{\pi} \int_{-b}^{b} g(y) dy \\
&= xf(x) - C,
\end{aligned} \tag{6.7}$$

where $C = \frac{1}{\pi} \int_{-b}^{b} g(y) dy$. Therefore, substituting equation (6.7) into equation (6.6) yields

$$xf(x) - C + \mathcal{H}_b(\sqrt{b^2 - y^2} f(y))(x) = xf(x) - \sqrt{b^2 - x^2} g(x).$$

Rearranging the above equation results in the inversion formula given by equation (6.3). Tricomi [38] showed that constant C has the character of an arbitrary constant due to the fact that

$$\mathcal{H}_b \left(\frac{1}{\sqrt{b^2 - y^2}} \right) (x) = 0 \tag{6.8}$$

and therefore, regardless of the value of C, the second term on the right side of the inversion formula (6.3) will vanish when the finite Hilbert operator is applied. Note that using the convolution identity to derive the inversion formula is valid as $\sqrt{b^2 - x^2} \in L^p[-b, b]$ for any large p and therefore the condition $1/p_1 + 1/p_2 < 1$ is satisfied. The inversion formula shows that if a solution to the airfoil equation exists in $L^{1+}[-b, b]$, then it is given by (6.3). Next, it has to be shown that the expression of g given by (6.3) is well defined. In particular, given that $f \in L^{4/3+}[-b, b]$ then $g \in L^{4/3-}[-b, b]$. To verify that, equation (6.3) can be rewritten as the following.

$$g(x) = -\frac{1}{\pi} \frac{1}{\sqrt{b^2 - x^2}} \int_{-b}^{b} \frac{(x + y) f(y)}{\sqrt{b^2 - x^2} + \sqrt{b^2 - y^2}} dy - \frac{1}{\pi} \int_{-b}^{b} \frac{f(y)}{x - y} dy + \frac{C}{\sqrt{b^2 - x^2}}. \tag{6.9}$$

In a following lemma about the boundedness of the Tricomi operator (6.1), it is shown that the first term on the right side of equation (6.9) is in $L^{4/3-}[-b,b]$ given that $f \in L^{4/3+}[-b,b]$. The second term on the right side of (6.9) corresponds to $\mathcal{H}_b(f)$ which, using the properties of finite Hilbert operator, belongs to the same class of f. Finally, the last term on the right side of (6.9) belongs to the class $L^{2-}[-b,b]$. In conclusion, the expression given by (6.3) belongs to the class $L^{4/3-}[-b,b]$ given that $f \in L^{4/3+}[-b,b]$. Now, it remains to show that g given by (6.3) is actually a solution to the airfoil equation(6.2). To do so, $f_1 = \sqrt{b^2 - x^2}$ and $f_2 = g(x)$ given by (6.3) are substituted in the convolution identity (6.4) and equations (6.5) and (6.7) are used to result in

$$\mathcal{H}_b\left(\sqrt{b^2-y^2}\mathcal{H}_b(g(z))(y)\right)(x) + xH_b(g(y))(x) - C = x\mathcal{H}_b(g(y))(x) - \sqrt{b^2-x^2}g(x).$$

Simplifying the above equation and using the definition of g given by (6.3) result in

$$\mathcal{H}_b\left(\sqrt{b^2-y^2}\mathcal{H}_b(g(z))(y)\right)(x) = C + \mathcal{H}_b\left(\sqrt{b^2-y^2}f(y)\right)(x) - C. \tag{6.10}$$

After simplifying the above equation and using the linearity of the finite Hilbert operator, the following equation is obtained.

$$\mathcal{H}_b\left(\sqrt{b^2-y^2}\left(\mathcal{H}_b(g(z))(y) - f(y)\right)\right)(x) = 0. \tag{6.11}$$

Tricomi [38] showed that, due to (6.8), the null space of the finite Hilbert operator is given by the span of the function $(b^2-x^2)^{\frac{-1}{2}}$ or equivalently,

$$\mathcal{H}_b(g) = 0 \Leftrightarrow g(x) = C''(b^2-x^2)^{\frac{-1}{2}}, \tag{6.12}$$

where C'' is an arbitrary constant. Using (6.12) in equation (6.11) results in

$$\mathcal{H}_b(g) - f = \frac{C'''}{b^2-x^2}, \tag{6.13}$$

where C''' is an arbitrary constant. But the right side of (6.13) is not integrable and the left side is integrable. Therefore, $C''' = 0$ and consequently

$$\mathcal{H}_b(g) = f, \tag{6.14}$$

and that completes the proof. □

Remark (Class of f). *One may question the necessity of imposing conditions on the class of function f in the airfoil equation* (6.2). *In fact, it is crucial to put restrictions on the class of f as, in general, there are no well-defined solutions to the airfoil equation in $L^{1+}[-b,b]$. The following example illustrates the previous point. Let*

$$f(y) = \frac{1}{y^2\sqrt{b^2-y^2}} \tag{6.15}$$

which is highly irregular and in $L^p[-b,b]$ with $p < 1/2$. If a solution to the airfoil equation associated with (6.15) *exists in $L^{1+}[-b,b]$, then it is given by the inversion formula* (6.3) *as the following.*

$$g(x) = \frac{1}{\pi\sqrt{b^2-x^2}}\int_{-b}^{b}\frac{1}{y^2(y-x)}dy + \frac{C}{\sqrt{b^2-x^2}}.$$

Without loss of generality, let $0 < x < b$. Then, the integral in the above equation is evaluated in the sense of Cauchy principal value as the following.

$$\begin{aligned}
\int_{-b}^{b}\frac{1}{y^2(y-x)}dy &= \lim_{t\to\infty}\left(\int_{-b}^{-\frac{1}{t}} + \int_{\frac{1}{t}}^{x-\frac{1}{t}} + \int_{x+\frac{1}{t}}^{b}\right)\frac{1}{y^2(y-x)}dy \\
&= \lim_{t\to\infty} A(x)\ln|y| + \frac{B(x)}{y} + C(x)\ln|y-x|\Big]_{-b}^{-\frac{1}{t}} \\
&\quad + A(x)\ln|y| + \frac{B(x)}{y} + C(x)\ln|y-x|\Big]_{\frac{1}{t}}^{x-\frac{1}{t}} \\
&\quad + A(x)\ln|y| + \frac{B(x)}{y} + C(x)\ln|y-x|\Big]_{x+\frac{1}{t}}^{b}
\end{aligned} \tag{6.16}$$

where $A(x)$, $B(x)$, and $C(x)$ are functions of x to be determined by the partial fractions decomposition of $1/(y^2(y-x))$ and the integration step. The integral in (6.16) *is divergent due to the term $B(x)/y$ and the singularity at y=0. Therefore, the airfoil equation with associated f given by* (6.15) *does not have a well-defined solution in $L^{1+}[-b,b]$. It is essential to have the solution in $L^{1+}[-b,b]$ as the solution, which corresponds to the pressure jump A, will be integrated to obtain expressions for the aerodynamic loads. An important point to be mentioned is that the estimate that f should belong to the class $L^{4/3+}[-b,b]$ comes from implementing Hölder's inequalities repetitively on some related functions and imposing that the integrals in the Hölder's inequalities are finite. A different approach to specifying the class of f may result in a different estimate.*

Next, the uniqueness of solutions to the classical airfoil equation is discussed in the following lemma.

Lemma 6.0.2. *Given $f \in L^p[-b,b]$ with $p > 2$, there exists a solution to the equation*

$$\mathcal{H}_b(g) = f$$

given by $g = \mathcal{T}(f) \in L^r[-b,b]$ with $1 < r < 4/3$. Moreover, the solution is unique in the class of functions satisfying the Kutta condition $\lim_{x\to b^-} g(x) = 0$.

Proof. Starting with the inversion formula from Lemma 6.0.1, any solution $g(x)$ can be expressed as

$$\begin{aligned}
g(x) &= \frac{1}{\pi}\int_{-b}^{b}\sqrt{\frac{b^2-y^2}{b^2-x^2}}\frac{f(y)}{y-x}\,dy + \frac{C}{\sqrt{b^2-x^2}} \\
&= \mathcal{T}(f(y))(x) - \frac{1}{\pi}\int_{-b}^{b}\sqrt{\frac{b^2-y^2}{b^2-x^2}}\frac{f(y)}{b-y}\,dy + \frac{C}{\sqrt{b^2-x^2}} \\
&= \mathcal{T}(f(y))(x) - \frac{1}{\pi}\frac{1}{\sqrt{b^2-x^2}}\int_{-b}^{b}\sqrt{\frac{b+y}{b-y}}f(y)\,dy + \frac{C}{\sqrt{b^2-x^2}} \\
&= \mathcal{T}(f(y))(x) - \frac{C_1}{\sqrt{b^2-x^2}} + \frac{C}{\sqrt{b^2-x^2}},
\end{aligned}$$

where

$$C_1 = \frac{1}{\pi}\int_{-b}^{b}\sqrt{\frac{b+y}{b-y}}f(y)\,dy$$

is finite since $f \in L^{2+}[-b,b]$, which implies that all possible solutions $g(x)$ can be expressed as

$$g(x) = \mathcal{T}(f(y))(x) + \frac{C_0}{\sqrt{b^2-x^2}},$$

with C_0 arbitrary. Now, As the solution $g(x)$ satisfies the Kutta condition, this implies $C_0 = 0$, and the proof is complete. □

Next, a bound for the norm of the Tricomi operator is obtained in the following lemma.

Lemma 6.0.3. *The Tricomi operator $\mathcal{T}$ defined in* (6.1) *is bounded from $L^p[-b,b]$ to $L^r[-b,b]$ for every $p > 2$ and $1 \le r < 4/3$.*

Proof. $\mathcal{T}(f)$ can be written as the following.

$$\begin{aligned}
\mathcal{T}(f(y))(x) &= \frac{1}{\pi}\sqrt{\frac{b-x}{b+x}}\int_{-b}^{b}\sqrt{\frac{b+y}{b-y}}\frac{f(y)}{y-x}\,dy \\
&= \frac{1}{\pi}\int_{-b}^{b}\sqrt{\frac{b^2-y^2}{b^2-x^2}}\frac{b-x}{b-y}\frac{f(y)}{y-x}\,dy \\
&= \frac{1}{\pi}\int_{-b}^{b}\sqrt{\frac{b^2-y^2}{b^2-x^2}}\frac{f(y)}{y-x}dy + \frac{1}{\pi}\int_{-b}^{b}\sqrt{\frac{b^2-y^2}{b^2-x^2}}\frac{f(y)}{b-y}\,dy \\
&= -\frac{1}{\pi}\frac{1}{\sqrt{b^2-x^2}}\int_{-b}^{b}\frac{(x+y)f(y)}{\sqrt{b^2-x^2}+\sqrt{b^2-y^2}}\,dy \\
&\quad -\frac{1}{\pi}\int_{-b}^{b}\frac{f(y)}{x-y}dy + \frac{1}{\pi}\frac{1}{\sqrt{b^2-x^2}}\int_{-b}^{b}\sqrt{\frac{b+y}{b-y}}f(y)\,dy \\
&= -\frac{1}{\sqrt{b^2-x^2}}\Pi_1(x) - \Pi_2(x) + \frac{1}{\sqrt{b^2-x^2}}\Pi_0
\end{aligned}$$

where

$$\Pi_1(x) = \frac{1}{\pi}\int_{-b}^{b}\frac{(x+y)f(y)}{\sqrt{b^2-x^2}+\sqrt{b^2-y^2}}\,dy,$$

$$\Pi_2(x) = \frac{1}{\pi}\int_{-b}^{b}\frac{f(y)}{x-y}\,dy,$$

and

$$\Pi_0 = \frac{1}{\pi}\int_{-b}^{b}\sqrt{\frac{b+y}{b-y}}f(y)\,dy.$$

Next, the norm of $\mathcal{T}(f)$ in $L^r[-b,b]$ given $f \in L^p[-b,b]$ is estimated. Using Minkowski's inequality, the norm $||\mathcal{T}(f)||_{L^r[-b,b]}$ is estimated by

$$||\mathcal{T}(f)||_{L^r[-b,b]} \leq \left|\left|\frac{1}{\sqrt{b^2-x^2}}\Pi_1\right|\right|_{L^r[-b,b]} + ||\Pi_2||_{L^r[-b,b]} + |\Pi_0|\left|\left|\frac{1}{\sqrt{b^2-x^2}}\right|\right|_{L^r[-b,b]}. \tag{6.17}$$

In the following discussion, the definitions of r and p are unchanged but the terms p' and q' are redefined for each subsection. Next, each term in (6.17) is considered separately.

First term $\left|\left|(b^2-x^2)^{-1/2}\Pi_1\right|\right|_{L^r[-b,b]}$

The first term $\left|\left|(b^2-x^2)^{-1/2}\Pi_1\right|\right|_{L^r[-b,b]}$ can be estimated by Hölder's inequality so that

$$\left|\left|\frac{1}{\sqrt{b^2-x^2}}\Pi_1\right|\right|^r_{L^r[-b,b]} \leq \left|\left|\frac{1}{\sqrt{b^2-x^2}}\right|\right|^{\frac{q'}{r}}_{L^{q'}[-b,b]} ||\Pi_1||^{\frac{p'}{r}}_{L^{p'}[-b,b]}$$

where $1/r = 1/q' + 1/p'$. Note that $\left|\left|(b^2 - x^2)^{-1/2}\right|\right|_{L^{q'}[-b,b]}$ is finite if $q' < 2$. Moreover, the term $||\Pi_1||_{L^{p'}[-b,b]}$ can be estimated using Hölder's inequality to yield

$$\begin{aligned}\int_{-b}^{b} |\Pi_1(x)|^{p'}\, dx &\leq \left(\int_{-b}^{b}\int_{-b}^{b}\left(\frac{|x+y|}{\pi(\sqrt{b^2-x^2}+\sqrt{b^2-y^2})}\right)^{p'} dy\, dx\right)\left(\int_{-b}^{b}|f(y)|^p\, dy\right)^{\frac{p'}{p}} \\ &\leq \left(\int_{-b}^{b}\int_{-b}^{b}\left(\frac{|x+y|}{\pi(\sqrt{b^2-x^2}+\sqrt{b^2-y^2})}\right)^{p'} dy\, dx\right)\|f\|^{p'}_{L^p[-b,b]},\end{aligned}$$

where $1/p' + 1/p = 1$. The double integral can be shown to be finite for $p' < 4$ [38]. To illustrate that, the double integral is estimated as the following.

$$\int_{-b}^{b}\int_{-b}^{b}\left(\frac{|x+y|}{\sqrt{b^2-x^2}+\sqrt{b^2-y^2}}\right)^{p'} dx\, dy \leq \int_{-b}^{b}\int_{-b}^{b}\left(\frac{2b}{\sqrt{b^2-x^2-y^2}}\right)^{p'} dx\, dy.$$

Using polar coordinates, the term $\int_{-b}^{b}\int_{-b}^{b}\left(2b/\sqrt{b^2-x^2-y^2}\right)^{p'} dx\, dy$ can be written as

$$\int_{-b}^{b}\int_{-b}^{b}\left(\frac{2b}{\sqrt{b^2-x^2-y^2}}\right)^{p'} dx\, dy = \frac{8(2b)^{p'}}{p'-2}\left(b^{2-p'}\int_0^{\frac{\pi}{4}}\left(2-\sec^2\theta\right)^{1-\frac{p'}{2}} d\theta - \frac{\pi}{2^{1+\frac{p'}{2}}}b^{2+p'}\right).$$

Using the substitution $u = 1 - \tan^2\theta$, the integration term $\int_0^{\pi/4}\left(2-\sec^2\theta\right)^{1-p'/2} d\theta$ can be estimated as

$$\begin{aligned}\int_0^{\frac{\pi}{4}}\left(2-\sec^2\theta\right)^{1-\frac{p'}{2}} d\theta &= \int_0^{\frac{\pi}{4}}\frac{1}{(1-\tan^2\theta)^{\frac{p'}{2}-1}}\, d\theta \\ &= \frac{1}{2}\int_0^1 \frac{1}{u^{\frac{p'}{2}-1}\sqrt{1-u}(2-u)}\, du \\ &= \frac{1}{2}\int_0^{\frac{1}{2}} \frac{1}{u^{\frac{p'}{2}-1}\sqrt{1-u}(2-u)}\, du + \frac{1}{2}\int_{\frac{1}{2}}^1 \frac{1}{u^{\frac{p'}{2}-1}\sqrt{1-u}(2-u)}\, du \\ &\leq \frac{\sqrt{3}}{2}\int_0^{\frac{1}{2}}\frac{1}{u^{\frac{p'}{2}-1}} du + 2^{\frac{p'}{2}-2}\int_{\frac{1}{2}}^1 \frac{1}{\sqrt{1-u}}\, du.\end{aligned}$$

From the above inequality, the finiteness is ensured when $p'/2 - 1 < 1$ and hence $p' < 4$. Since $q' < 2$, then $r < 4/3$ and $p > 4/3$.

The second term $||\Pi_2||_{L^r[-b,b]}$

The term Π_2 corresponds to the finite Hilbert operator applied on f. Using Riesz theorem [30], the finite Hilbert operator is bounded on $L^s[-b,b]$ for any $s > 2$. Consequently, $||\Pi_2||_{L^r[-b,b]} \leq C_{p,r}\|f\|_{L^p[-b,b]}$ for $1 \leq r \leq p$ where $C_{p,r}$ is a positive constant that depends on p and r .

The third term $\Pi_0 \left|\left|(b^2-x^2)^{-1/2}\right|\right|_{L^r[-b,b]}$

For the last term $\Pi_0 \left|\left|(b^2-x^2)^{-1/2}\right|\right|_{L^r[-b,b]}$, it can be shown that Π_0 is a finite constant since

$$\begin{aligned}|\Pi_0| &\leq \frac{1}{\pi}\int_{-b}^{b}\left|\sqrt{\frac{b+y}{b-y}}f(y)\right|dy \\ &\leq \frac{1}{\pi}\left(\int_{-b}^{b}\left(\frac{b+y}{b-y}\right)^{\frac{p'}{2}}dy\right)^{\frac{1}{p'}}\|f\|^p_{L^p[-b,b]},\end{aligned}$$

where $1/p'+1/p=1$. Note that the integral in the above inequality is finite when $p'<2$ which corresponds to the case of $p>2$. Moreover, the term $\left|\left|(b^2-x^2)^{-1/2}\right|\right|_{L^r[-b,b]}$ is finite when $r<2$ without imposing any conditions on p. Based on studying the boundedness of the three terms in (6.17), $\mathcal{T}$ is bounded when $p>2$ and $r<4/3$ and that completes the proof. $\square$

In the following chapter, the inversion relation between the finite Hilbert operator and the Tricomi operator and the boundedness of the Tricomi operator will be used to prove the existence and uniqueness of solution to the Possio integral equation (5.9).

7. Existence and Uniqueness of Solutions to the Possio Equation for the Case k=0

In this chapter, the existence and uniqueness of solution to equation (5.9) is established through the framework of contraction mapping theory. Next, the Tricomi operator is applied to each side of equation (5.9) to yield

$$\frac{2}{\sqrt{1-M^2}}\mathcal{T}(w_a) = A - \mathcal{TPLHP}A = (\mathcal{I} - \mathcal{TPLHP})A. \tag{7.1}$$

The equivalence of equation (5.9) and (7.1) follows from Lemma 6.0.2, under the assumption of $w_a \in L^{2+}[-b,b]$, $\mathcal{PLHP}(A) \in L^{2+}[-b,b]$, and $A \in L^{4/3-}[-b,b]$ with A satisfying the Kutta condition. Note that the Tricomi operator defined in (6.1) maps functions from $L^{2+}[-b,b]$ to $L^{4/3-}[-b,b]$ in a bounded fashion according to lemma (6.0.3) while the operator $\mathcal{PLHP}$ maps functions from $L^{4/3-}[-b,b]$ to $L^{2+}[-b,b]$. If the operator $\mathcal{PLHP}$ is bounded, which is verified in a following lemma, the existence and uniqueness of a solution A in $L^{4/3-}[-b,b]$ to (7.1) can be established. Let $\mathcal{L}(X,Y)$ be the space of linear bounded operators from a Banach space X to a Banach space Y(can be written as $\mathcal{L}(X)$ if $Y = X$) and let $||T||_{\mathcal{L}(X,Y)}$ be the conventional operator norm of a bounded linear operator $T \in \mathcal{L}(X,Y)$. If there exists values of c such that $||\mathcal{TPLHP}||_{\mathcal{L}(L^{4/3-}[-b,b])} < 1$, then the solution to equation (7.1) is given uniquely by

$$A = \frac{2}{\sqrt{1-M^2}}(\mathcal{I} - \mathcal{TPLHP})^{-1}\mathcal{T}(w_a) = \frac{2}{\sqrt{1-M^2}}\sum_{n=0}^{\infty}(\mathcal{TPLHP})^n\mathcal{T}(w_a). \tag{7.2}$$

The expression in (7.2) can then be rearranged to give

$$A = \frac{2}{\sqrt{1-M^2}}\mathcal{T}(w_a) + \frac{2}{\sqrt{1-M^2}}\sum_{n=1}^{\infty}(\mathcal{TPLHP})^n\mathcal{T}(w_a). \tag{7.3}$$

The right side of equation (7.3) shows that the pressure jump is a linear combination of two terms. The first term is equivalent to the pressure jump along the airfoil in an open flow and the second term couples the effect of the downwash with the effect of the elevation from the ground (ground effect). Next, a preliminary lemma is introduced in order to establish the existence and uniqueness of the solution to the derived Possio equation (7.1).

Lemma 7.0.1. *The operator $\mathcal{PLHP} : L^{4/3-}[-b,b] \to L^{2+}[-b,b]$ given by equation (5.7) is bounded with a bound inversely proportional to c.*

Proof. Let $\mathcal{PLHP} : L^p[-b,b] \to L^r[-b,b]$ where $r > 2$ and $p < 4/3$. The operator $\mathcal{PLHP}$ can be written as :

$$\mathcal{PLHP}(f)(x) = \frac{1}{\pi}\mathcal{X}_{[-b,b]}(x)\int_{-\infty}^{\infty}\mathcal{X}_{[-2b,2b]}(x-\tau)g_c(x-\tau)f(\tau)\mathcal{X}_{[-b,b]}(\tau)d\tau \tag{7.4}$$

where $\mathcal{X}_Q(x)$ is simple function that is equal to one inside Q and vanishes outside it and $g_c(t) = t/(t^2+c^2)$. It can be seen that $\mathcal{PLHP}$ in (7.4) is written as composition of a projection (multiplying by $\mathcal{X}_{[-b,b]}(x)$) and a convolution (the integration in (7.4)). In other words, $\mathcal{PLHP}$ can be seen as an integral operator (denote it $\mathcal{G}_c : L^{4/3-}[-b,b] \to L^{2+}[-2b,2b]$) followed by a projection operator (denote it $\mathcal{P}_{2b\to b} : L^{2+}[-2b,2b] \to L^{2+}[-b,b]$). In other words,

$$\mathcal{PLHP} = \frac{1}{\pi}\mathcal{P}_{2b\to b}\mathcal{G}_c.$$

It is clear that the mentioned projection operator has a norm less than or equal to one. So, the estimate of the operator norm $||\mathcal{PLHP}||_{\mathcal{L}(L^p[-b,b],L^r[-b,b])}$ depends mainly on estimating the norm of the integral operator $\mathcal{G}_c$. The norm of $\mathcal{G}_c$ is defined as

$$\begin{aligned}||\mathcal{G}_c||_{\mathcal{L}(L^p[-b,b],L^r[-2b,2b])} &= \sup_{||f||_{L^p_{[-b,b]}}\leq 1}||\mathcal{G}_c(f)||_{L^r_{[-2b,2b]}} \\ &= \sup_{||f||_{L^p}\leq 1}\left|\left|\int_{-\infty}^{\infty}\mathcal{X}_{[-2b,2b]}(x-\tau)g_c(x-\tau)\mathcal{X}_{[-b,b]}(\tau)f(\tau)d\tau\right|\right|_{L^r},\end{aligned}$$

where $p < 4/3$ and $r > 2$. Let q be related to p and r through the relation $1/p+1/q = 1+1/r$. Then using Young's inequality for convolution, the norm of the integral operator operator $||\mathcal{G}_c||_{\mathcal{L}(L^p[-b,b],L^r[-2b,2b])}$ is estimated by

$$||\mathcal{G}_c||_{\mathcal{L}(L^p[-b,b],L^r[-2b,2b])} \leq ||g_c||_{L^q[-2b,2b]},$$

where $||g_c||_{L^q[-2b,2b]}$ is estimated by

$$||g_c||_{L^q[-2b,2b]} = \left(\int_{-2b}^{2b}\left|\frac{t}{t^2+c^2}\right|^q dt\right)^{\frac{1}{q}} \leq \left|\frac{c}{c^2+c^2}\right|(4b)^{\frac{1}{q}} = \frac{(4b)^{\frac{1}{q}}}{2c}$$

and that completes the proof. □

Finally, the existence-uniqueness theorem of equation (5.9) is introduced and proved.

Theorem 7.0.2. *Given $w_a \in L^p[-b,b]$ with $p > 2$, there exists a value $c_0 > 0$ such that for all $c > c_0$ the Possio equation* (5.9) *has a unique solution $A \in L^{4/3-}[-b,b]$ satisfying the Kutta condition.*

Proof. Consider the equivalent equation (7.1). Given $w_a \in L^p[-b,b]$ with $p > 2$, $\mathcal{T}(w_a) \in L^r[-b,b]$ for every $r < 4/3$. It is sufficient to show that the operator $\mathcal{TPLHP}$ is a contraction on the space $L^r[-b,b]$. Now, $\mathcal{TPLHP}$ is bounded on $L^r[-b,b]$ since it is a composition of $\mathcal{PLHP} : L^{4/3-}[-b,b] \to L^{2+}[-b,b]$ and $\mathcal{T} : L^{2+}[-b,b] \to L^{4/3-}[-b,b]$ as established in Lemmas 6.0.3 and 7.0.1 respectively. The norm $||\mathcal{TPLHP}||_{\mathcal{L}(L^r[-b,b])}$ is estimated using the bounds on $||\mathcal{T}||_{\mathcal{L}(L^p,L^r)}$ and $||\mathcal{PLHP}||_{\mathcal{L}(L^r,L^p)}$, from Lemmas 6.0.3 and 7.0.1 respectively, to obtain

$$\begin{aligned} ||\mathcal{TPLHP}||_{\mathcal{L}(L^r[-b,b])} &\leq ||\mathcal{T}||_{\mathcal{L}(L^p[-b,b],L^r[-b,b])}||\mathcal{PLHP}||_{\mathcal{L}(L^r[-b,b],L^p[-b,b])} \\ &\leq \frac{K(4b)^{\frac{1}{q}}}{2c}, \end{aligned}$$

where $1/p + 1/q = 1 + 1/r$, and $K = ||\mathcal{T}||_{\mathcal{L}(L^p[-b,b],L^r[-b,b])}$. Choosing $c > c_0 = K(4b)^{1/q}/2$ results in that $||\mathcal{TPLHP}||_{\mathcal{L}(L^r[-b,b])}$ is a contraction, and hence (7.1) has a unique solution $A \in L^r[-b,b]$ for any $1 < r < 4/3$. Moreover, A clearly satisfies the Kutta condition. From Lemma 6.0.2, A must satisfy (5.9), and on the other hand, a solution to (5.9) which satisfies the Kutta condition must necessarily satisfy (7.1). This establishes that A is the unique solution to (5.9) in the class of $L^{4/3-}[-b,b]$ functions satisfying the Kutta condition. □

8. Approximate Solution to the Possio Equation for the Case k=0

In the previous chapter, it is shown that the solution to equation (5.9) or its equivalence (7.1) is given by (7.2). Unfortunately, the given expression of the solution cannot be evaluated in general. Therefore, an approximate solution to (7.1) is obtained in this chapter. Function $g\left((\tau-t)/c\right)$ in equation (5.7) is approximated linearly by $(\tau-t)/c$. Therefore, $\mathcal{TPHP}(A)$ can be approximated by

$$\mathcal{TPLHP}(A(\tau))(x) = \frac{-1}{\pi c}\int_{-b}^{b} A(\tau)\left(\sqrt{\frac{b-x}{b+x}}\int_{-b}^{b}\sqrt{\frac{b+t}{b-t}}\frac{1}{t-x}\frac{\tau-t}{c}dt\right)d\tau. \quad (8.1)$$

Note that changing integration order was implemented when introducing equation (8.1) and that can be verified by simple direct calculations. The expression between brackets in (8.1) corresponds to applying the Tricomi operator on $(\tau-t)/c$. Therefore, $\mathcal{TPHP}(A)$ can be written as the following.

$$\mathcal{TPLHP}(A(\tau))(x) = \frac{-1}{\pi c^2}\int_{-b}^{b} A(\tau)\left(\tau\mathcal{T}(1)(x) - \mathcal{T}(t)(x)\right)d\tau,$$

where $\mathcal{T}(1)(x) = \sqrt{(b-x)/(b+x)}$ and $\mathcal{T}(t)(x) = \sqrt{b^2-x^2}$. Therefore, equation (7.1) is approximated to be

$$\frac{2}{\sqrt{1-M^2}}\mathcal{T}(w_a) = A - \frac{1}{\pi c^2}\left(\sqrt{b^2-x^2}\mathcal{R}_0(A) - \sqrt{\frac{b-x}{b+x}}\mathcal{R}_1(A)\right), \quad (8.2)$$

where $\mathcal{R}_0(A) = \int_{-b}^{b} A(\tau)d\tau$ and $\mathcal{R}_1(A) = \int_{-b}^{b} \tau A(\tau)\,d\tau$. Applying $\mathcal{R}_0$ and $\mathcal{R}_1$ on equation (8.2) respectively results in the set of equations

$$\begin{aligned}\frac{2}{\sqrt{1-M^2}}\mathcal{R}_0((\mathcal{T}(w_a))) &= \mathcal{R}_0(A)\\ &\quad - \frac{1}{\pi c^2}\left(\mathcal{R}_0\left(\sqrt{b^2-x^2}\right)\mathcal{R}_0(A) - \mathcal{R}_0\left(\sqrt{\frac{b-x}{b+x}}\right)\mathcal{R}_1(A)\right),\end{aligned}$$

$$\begin{aligned}\frac{2}{\sqrt{1-M^2}}\mathcal{R}_1((\mathcal{T}(w_a))) &= \mathcal{R}_1(A)\\ &\quad - \frac{1}{\pi c^2}\left(\mathcal{R}_1\left(\sqrt{b^2-x^2}\right)\mathcal{R}_0(A) - \mathcal{R}_1\left(\sqrt{\frac{b-x}{b+x}}\right)\mathcal{R}_1(A)\right),\end{aligned}$$

where $\mathcal{R}_0\left(\sqrt{(b-x)/(b+x)}\right) = b\pi$, $\mathcal{R}_0(\sqrt{b^2-x^2}) = \pi b^2/2$, $\mathcal{R}_1\left(\sqrt{(b-x)/(b+x)}\right) = -\pi b^2/2$, and $\mathcal{R}_1(\sqrt{b^2-x^2}) = 0$. Solving the above set of equations for $\mathcal{R}_0(A)$ and $\mathcal{R}_1(A)$ results in

$$\begin{aligned}
\mathcal{R}_0(A) &= \frac{2}{\sqrt{1-M^2}\left(1-\frac{b^2}{2c^2}\right)^2}\left(\left(1-\frac{b^2}{2c^2}\right)\mathcal{R}_0\left(\mathcal{T}(w_a)\right) - \frac{b}{c^2}\mathcal{R}_1\left(\mathcal{T}(w_a)\right)\right), \qquad (8.3)\\
\mathcal{R}_1(A) &= \frac{2\mathcal{R}_1\left(\mathcal{T}(w_a)\right)}{\sqrt{1-M^2}\left(1-\frac{b^2}{2c^2}\right)}.
\end{aligned}$$

Finally, substituting (8.3) into (8.2) and solving for A yield

$$\begin{aligned}
A &= \frac{2}{\sqrt{1-M^2}}\\
&\times\left[\mathcal{T}(w_a) + \frac{1}{\pi c^2\left(1-\frac{b^2}{2c^2}\right)^2}\begin{pmatrix}\sqrt{b^2-x^2}\\ -\sqrt{\frac{b-x}{b+x}}\end{pmatrix}^T\begin{pmatrix}1-\frac{b^2}{2c^2} & -\frac{b}{c^2}\\ 0 & 1-\frac{b^2}{2c^2}\end{pmatrix}\begin{pmatrix}\mathcal{R}_0\left(\mathcal{T}(w_a)\right)\\ \mathcal{R}_1\left(\mathcal{T}(w_a)\right)\end{pmatrix}\right].
\end{aligned} \qquad (8.4)$$

Note that the approximate solution in (8.4) satisfies the Kutta condition. Moreover, denote the approximate solution in (8.4) by A'. The difference between the approximate solution A' and the exact solution in (7.2) can be estimated as the following. Let $G = \mathcal{PLHP}$ and let G' be the approximation of G introduced in (8.1). It can be shown, In a methodology similar to the one applied to the operator G in the previous chapter, that the operator G' is bounded on $\mathcal{L}(L^{4/3-}[-b,b])$ with a bound inversely proportional to c. If c is sufficiently large, then both $||G||_{\mathcal{L}(L^{4/3-}[-b,b])}$ and $||G'||_{\mathcal{L}(L^{4/3-}[-b,b])}$ are less than one and moreover, the equations $\mathcal{T}(w_a) = (\mathcal{I}-G)A$ and $\mathcal{T}(w_a) = (\mathcal{I}-G')A'$ have the unique solutions $A = (\mathcal{I}-G)^{-1}\mathcal{T}(w_a) = \sum_{n=0}^{\infty} G^n\mathcal{T}(w_a)$ and $A' = (\mathcal{I}-G')^{-1}\mathcal{T}(w_a) = \sum_{n=0}^{\infty}(G')^n\mathcal{T}(w_a)$ respectively. Therefore, the error $||A-A'||_{L^{4/3-}[-b,b]}$ has the following bound (the norms' subscripts are dropped in the

following relation to avoid tediousness).

$$
\begin{aligned}
||A - A'|| &= ||(\mathcal{I} - G)^{-1}\mathcal{T}(w_a) - (\mathcal{I} - G')^{-1}\mathcal{T}(w_a)|| \\
&= ||[(\mathcal{I} - G)^{-1} - (\mathcal{I} - G')^{-1}]\mathcal{T}(w_a)|| \\
&\leq ||(\mathcal{I} - G)^{-1} - (\mathcal{I} - G')^{-1}||\ ||\mathcal{T}(w_a)|| \\
&= ||(\mathcal{I} - G')^{-1}(\mathcal{I} - G')(\mathcal{I} - G)^{-1} - (\mathcal{I} - G')^{-1}(\mathcal{I} - G)(\mathcal{I} - G)^{-1}||\ ||\mathcal{T}(w_a)|| \\
&= ||(\mathcal{I} - G)^{-1}(G - G')(\mathcal{I} - G')^{-1}||\ ||\mathcal{T}(w_a)|| \\
&\leq ||(\mathcal{I} - G)^{-1}||\ ||G - G'||\ ||(\mathcal{I} - G')^{-1}||\ ||\mathcal{T}(w_a)|| \\
&\leq \sum_{n=0}^{\infty} ||G||^n\ ||G - G'||\ \sum_{n=0}^{\infty} ||G'||^n\ ||\mathcal{T}(w_a)|| \\
&= \frac{||\mathcal{T}(w_a)||}{(1 - ||G||)\,(1 - ||G'||)} ||G - G'||.
\end{aligned}
\tag{8.5}
$$

The bound in (8.5) shows that the error $||A - A'||_{L^{4/3-}[-b,b]}$ depends continuously on $||G - G'||_{\mathcal{L}(L^{4/3-}[-b,b])}$. Consequently, $||A - A'||_{L^{4/3-}[-b,b]} \to 0$ as $||G - G'||_{\mathcal{L}(L^{4/3-}[-b,b])} \to 0$. In the next section, expressions of the aerodynamic lift and moment are obtained based on the approximate solution given by (8.4).

8.1 Lift and Moment Calculations

After obtaining the approximate solution (8.4), it remains to calculate the aerodynamic lift and moment on the airfoil. Obtaining expressions for the aerodynamic lift and moment is essential to conduct aerodynamic and aeroelastic analyses on wing structures.

For the steady state case, the airfoil downwash w_a is a function of the angle of attack θ. In particular,

$$
w_a = -U\theta. \tag{8.6}
$$

Note that the downwash given in (8.6) is not a function of x and therefore, only $\mathcal{R}_0(\mathcal{T}(1))$ and $\mathcal{R}_1(\mathcal{T}(1))$ are required to compute the pressure jump for the steady state case with a downwash given by (8.6). The pressure jump is calculated to be

$$
A = -\frac{2U\theta}{\sqrt{1 - M^2}} \left[\left(1 + \frac{b^2}{2c^2\left(1 - \frac{b^2}{2c^2}\right)} \right) \sqrt{\frac{b - x}{b + x}} + \frac{b}{c^2\left(1 - \frac{b^2}{2c^2}\right)^2} \sqrt{b^2 - x^2} \right]. \tag{8.7}
$$

Now, the aerodynamic lift $\mathbf{F}$ on the airfoil is calculated using the formula

$$\mathbf{F} = -\rho U \int_{-b}^{b} A(x)dx = -\rho U \mathcal{R}_0(A). \tag{8.8}$$

Substituting equation (8.7) into equation (8.8) results in

$$\mathbf{F} = \frac{2\pi\rho U^2 b\theta}{\sqrt{1-M^2}} + \frac{\pi\rho U^2 b^3\theta}{\sqrt{1-M^2}} \frac{2-\frac{b^2}{2c^2}}{c^2\left(1-\frac{b^2}{2c^2}\right)^2}. \tag{8.9}$$

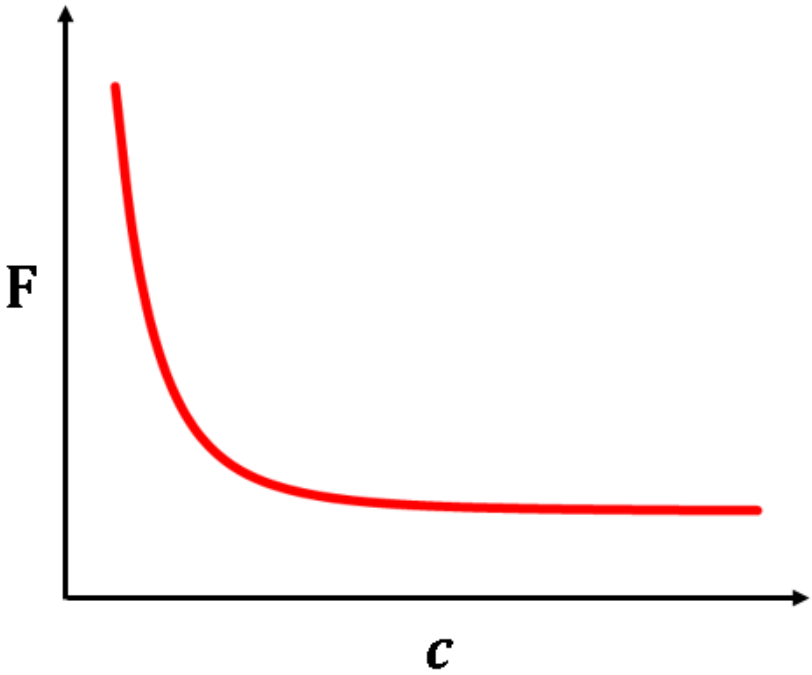

Figure 8.1: General shape of the lift force profile as a function of the parameter c.

Note that in equation (8.9), the first term on the right hand side represents the aerodynamic lift assuming an open flow and the second term introduces the aerodynamic lift due to the ground effect. The general shape of the aerodynamic lift profile as a function of the parameter c is shown in figure 8.1. Next, the aerodynamic moment $\mathbf{M}$ on the airfoil is calculated using the equation

$$\mathbf{M} = \rho U \int_{-b}^{b} (x-a)A(x)\,dx = \rho U \mathcal{R}_1(A) + a\mathbf{F}, \tag{8.10}$$

where a is the location of the center of rotation of the airfoil. Substituting equation (8.4) into equation (8.10) results in

$$\mathbf{M} = \left(\frac{\pi\rho U^2 b^2\theta}{\sqrt{1-M^2}} + \frac{2\pi a\rho U^2 b\theta}{\sqrt{1-M^2}}\right) + \left(\frac{\pi\rho U^2\theta b^4}{2c^2\sqrt{1-M^2}\left(1-\frac{b^2}{2c^2}\right)} + \frac{\pi a\rho U^2 b^3\theta}{\sqrt{1-M^2}} \frac{2-\frac{b^2}{2c^2}}{c^2\left(1-\frac{b^2}{2c^2}\right)^2}\right). \tag{8.11}$$

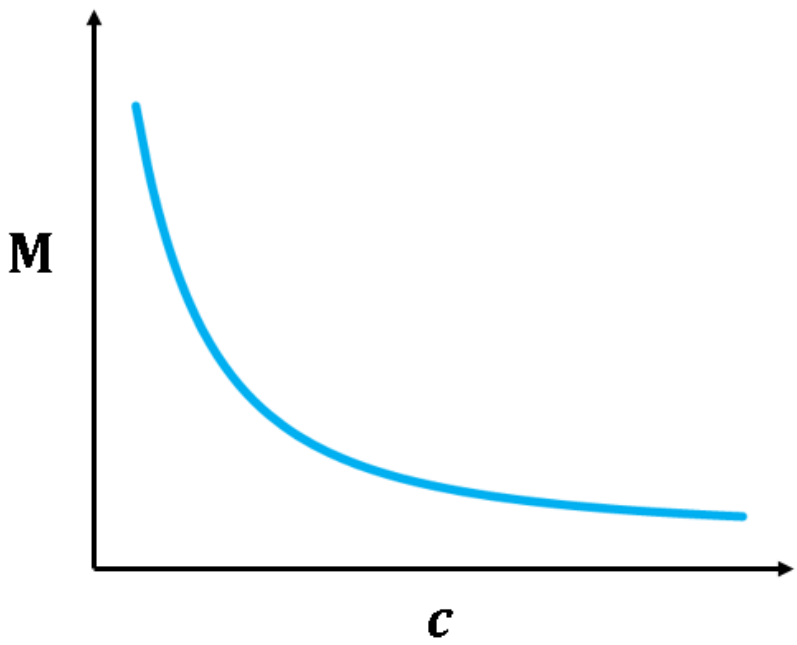

Figure 8.2: General shape of the moment profile as a function of the parameter c.

Similar to equation (8.9), equation (8.11) separates the open flow moment (first term on the right hand side) from the moment due to the ground effect. The general profile of the aerodynamic moment as a function of the parameter c is illustrated in figure 8.2

Remark (Complex analysis approach)**.** *For the steady state incompressible case* $(k = 0, M = 0)$*, the present problem can be studied using complex analytic methods which include Joukowski transformations to construct flow potential and contour integration to obtain the aerodynamic loads [2]. Despite the relative ease of obtaining flow potential using Joukowski transformations, up to the knowledge of the author, there are no closed expressions for the aerodynamic loads in the present case.*

8.2 Divergence Speed

One of the important parameters in the static aeroelastic analysis of wing structures is the divergence speed [16]. Divergence speed is defined as the minimum speed at which the static aeroelastic equations linearized about the steady state solution have a nonzero solution [7]. At that speed, the aerodynamic loads on a wing structure

leads to its deformation in a way such that the aerodynamic loads increase even more. Consequently, the wing structure deforms excessively which may lead to its structural failure. In this section, the divergence speed U_{div} of a thin wing structure (see figure (8.3)) located near the ground in a subsonic flow is calculated. The calculation of the divergence speed in this section is based on expressions (8.9) and (8.11) of the aerodynamic lift moment that are obtained in the previous section.

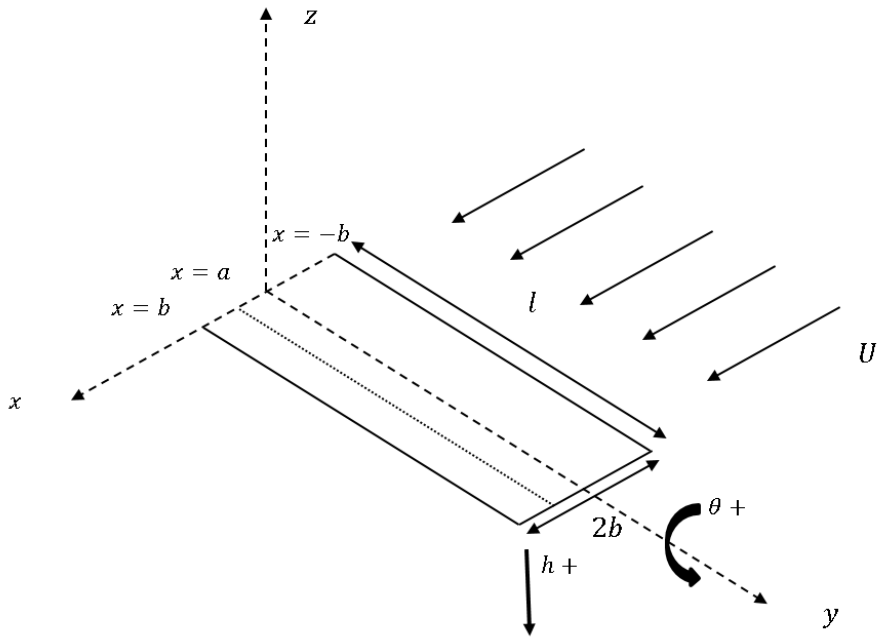

Figure 8.3: Wing configuration

The steady state configuration of the wing is governed by the equations

$$-GJ\frac{d^2}{dy^2}\theta = \mathbf{M}, \tag{8.12}$$

$$EI\frac{d^2}{dy^4}h = -\mathbf{F}, \tag{8.13}$$

where $0 \leq y \leq L$, L is the span of the wing, $\theta(y)$ is the torsion angle and corresponds to the angle of attack in (8.6), $h(y)$ is the deflection of the wing, GJ is the torsional stiffness of the wing, and EI is the bending stiffness. The clamped-free boundary conditions satisfied by h and θ are given by

$$\theta(0) = h(0) = \frac{d}{dy}\theta\bigg|_{y=L} = \frac{d^2}{dy^2}h\bigg|_{y=L} = \frac{d^3}{dy^3}h\bigg|_{y=L} = 0. \tag{8.14}$$

The divergence speed is obtained by solving the eigenvalue problem of finding the minimum free stream velocity that satisfies system (8.12)–(8.13) and the boundary

conditions (8.14). The divergence speed is now calculated as the following. The Moment expression (8.11) is rewritten as

$$\mathbf{M} = U^2 \delta \theta, \tag{8.15}$$

where

$$\begin{aligned} \delta = &\left(\frac{\pi \rho b^2}{\sqrt{1-M^2}} + \frac{2\pi a \rho b}{\sqrt{1-M^2}} \right) \\ &+ \left(\frac{\pi \rho b^4}{2c^2 \sqrt{1-M^2}\left(1-\frac{b^2}{2c^2}\right)} + \frac{\pi a \rho b^3}{\sqrt{1-M^2}} \frac{2-\frac{b^2}{2c^2}}{c^2\left(1-\frac{b^2}{2c^2}\right)^2} \right). \end{aligned} \tag{8.16}$$

Then, the governing equation of the torsion is given by

$$\frac{d^2}{dy^2}\theta + \frac{U^2 \delta}{GJ}\theta = 0. \tag{8.17}$$

The general solution to equation (8.17) is

$$\theta(y) = a_1 \sin\left(U\sqrt{\frac{\delta}{GJ}} y \right) + a_2 \cos\left(U\sqrt{\frac{\delta}{GJ}} y \right), \tag{8.18}$$

where a_1 and a_2 are positive constants that depend on the boundary conditions. For the boundary conditions (8.14), the following relation is obtained

$$\cos\left(U\sqrt{\frac{\delta}{GJ}} L \right) = 0 \Rightarrow U\sqrt{\frac{\delta}{GJ}} L = \frac{2n+1}{2}\pi, n = 0, \pm 1, \pm 2, ... \tag{8.19}$$

The lowest speed that satisfies equation (8.19) (divergence speed) is then given by

$$U_{div} = \frac{\pi}{2L}\sqrt{\frac{GJ}{\delta}}. \tag{8.20}$$

Note that equation (8.13) is not relevant in the calculation of the divergence speed as solving equation (8.13) with its associated boundary conditions does not impose any additional conditions, similar to condition (8.19), on the divergence speed.

Remark (Flutter analysis)**.** *The present work can be extended to obtain lift and moment expressions for the incompressible transient case* $(k \neq 0, M = 0)$ *and consequently a flutter analysis can be conducted in a fashion similar to [10].*

Conclusions and Future Work

In this work, the problem of subsonic potential flow over a thin airfoil located near the ground is studied. A singular integral equation, namely the Possio integral equation, is derived to relate the pressure jump along the thin airfoil to its downwash. The existence and uniqueness of solutions to the Possio integral equation is verified for the case of steady subsonic potential flow. Moreover, an approximate solution of the derived Possio integral equation is obtained for the steady state case and closed-form expressions of the aerodynamic loads are obtained based on the approximate solution to the Possio integral equation. Finally, an important static aeroelastic parameter, divergence speed, is calculated for a wing structure located near the ground in a subsonic potential flow.

The framework of this work can be extended in future works to cover some topics in aeroelasticity. For example, as mentioned previously, a Possio integral equation for transient potential subsonic flow over a thin airfoil in ground effect can be derived and solved for certain values of the Mach number and ,consequently, flutter analysis on wing structures in ground effect can be conducted. Moreover, the framework of the Possio integral equation can be applied on the problem of axial flow over cantilever plates which is a recent topic of importance especially in energy harvesting applications.

References

[1] Abramowski, T. (2007). Numerical investigation of airfoil in ground proximity. *Journal of Theoretical and Applied Mechanics*, *45*(2), 425-436.

[2] Acheson, D. J. (1990). *Elementary fluid dynamics*. Oxford University Press.

[3] Ahmed, M. R., and Sharma, S. D. (2005). An investigation on the aerodynamics of a symmetrical airfoil in ground effect. *Experimental Thermal and Fluid Science*, *29*(6), 633-647.

[4] Avanzini, G., and De Santis, A. (2006). Beyond Possio Equation: The Legacy of Camillo Possio to Flight Dynamics and Hydrodynamics. Proceedings of the *IFIP Conference on System Modeling and Optimization* (pp. 23-33). Springer US.

[5] Babbar, Y., Suryakumar, V. S., Strganac, T. W., and Mangalam, A. S. (2015). Measurement and Modeling of Aeroelastic Response under Gust.Proceedings of the *33rd AIAA Applied Aerodynamics Conference* (p. 2724).

[6] Balakrishnan, A. V. (2012). *Aeroelasticity: The Continuum Theory*. Springer Science and Business Media.

[7] Balakrishnan, A. V., and Tuffaha, A. (2012). The transonic dip in aeroelastic divergence speedAn explicit formula. *Journal of the Franklin Institute*, *349*(1), 59-73.

[8] Balakrishnan, A. V. (2010). State space representation of flexible structure dynamics in air flow. *Journal of the Franklin Institute*, *347*(1), 17-29.

[9] Balakrishnan, A. V., and Shubov, M. A. (2008). Reduction of boundary value problem to Possio integral equation in theoretical aeroelasticity. *Journal of Applied Mathematics*.

[10] Balakrishnan, A. V., and Iliff, K. W. (2007). Continuum aeroelastic model for inviscid subsonic bending-torsion wing flutter. *Journal of Aerospace Engineering*, *20*(3), 152-164.

[11] Balakrishnan, A. V. (2006). The Possio integral equation of aeroelasticity: a modern view. Proceedings of the *IFIP Conference on System Modeling and Optimization* (pp. 15-22). Springer US.

[12] Balakrishnan, A. V. (2004). Transonic small disturbance potential equation. *AIAA journal*, *42*(6), 1081-1088.

[13] Balakrishnan, A. V. (2003). Possio integral equation of aeroelasticity theory. *Journal of Aerospace Engineering*, *16*(4), 139-154.

[14] Carabineanu, A. (1999). Incompressible flow past oscillatory wings of low aspect ratio by the integral equations method. *International journal for numerical methods in engineering*, *45*(9), 1187-1201.

[15] Chueshov, I., Dowell, E. H., Lasiecka, I., and Webster, J. T. (2016). Nonlinear elastic plate in a flow of gas: Recent results and conjectures. *Applied Mathematics and Optimization*, *73*(3), 475-500.

[16] Dowell, E. H., Clark, R., and Cox, D. (2004). *A modern course in aeroelasticity* (Vol. 3). Dordrecht: Kluwer academic publishers.

[17] Feldman, M. (2011). *Hilbert transform applications in mechanical vibration.* John Wiley and Sons.

[18] Gao, C., Duan, G., and Jiang, C. (2009). Robust controller design for active flutter suppression of a two-dimensional airfoil. *Nonlinear dynamics and systems theory*, *9*(3), 287-299.

[19] Hahn, S. L. (1996). *Hilbert transforms in signal processing* (Vol. 2). Boston: Artech House.

[20] Hodges, D. and Pierce, G. (2011). *Introduction to Structural Dynamics and Aeroelasticity* (1st ed.). Cambridge: Cambridge University Press.

[21] Jung, K. H., Chun, H. H., and Kim, H. J. (2008). Experimental investigation of wing-in-ground effect with a NACA6409 section. *Journal of marine science and technology*, *13*(4), 317-327.

[22] Lance, G. N. (1954). The Kernel Function of the Integral Equation Relating the Lift and Downwash Distributions of Oscillating Finite Wings in Subsonic Flow. *Journal of the Aeronautical Sciences*, *21*(9), 635-636.

[23] Lasiecka, I., and Webster, J. T. (2014). Nonlinear plates interacting with a subsonic, inviscid flow via KuttaJoukowski interface conditions. *Nonlinear Analysis: Real World Applications*, *17*, 171-191.

[24] Li, D., Guo, S., and Xiang, J. (2010). Aeroelastic dynamic response and control of an airfoil section with control surface nonlinearities. *Journal of Sound and Vibration*, *329*(22), 4756-4771.

[25] Lin, J., and Iliff, K. W. (2000). Aerodynamic lift and moment calculations using a closed-form solution of the Possio equation. *Nasa/TM-2000-209019*.

[26] Mikhlin, S. *Multidimensional Singular Integrals and Integral Equations*, Pergamon Press, New York, USA, 1965.

[27] Plotkin, A., and Dodbele, S. (1988). Slender wing in ground effect. *AIAA journal*, *26*(4), 493-494.

[28] Polyakov, P. (2007). On a boundary value problem in subsonic aeroelasticity and the cofinite Hilbert transform. *Journal Of Integral Equations And Applications*, *19*(1), 33-70. http://dx.doi.org/10.1216/jiea/1181075422

[29] Possio, C. (1938). L'azione aerodinamica sul profilo oscillante in un fluido compressibile a velocita iposonora. *L'aerotecnica*, *18*(4), 441-458.

[30] Riesz, M. (1928). Sur les fonctions conjugues. *Mathematische Zeitschrift*, *27*(1), 218-244.

[31] Rozhdestvensky, K. V. (2006). Wing-in-ground effect vehicles. *Progress in Aerospace Sciences*, *42*(3), 211-283.

[32] Sears, W. R. (1940). Operational methods in the theory of airfoils in non-uniform motion. *Journal of the Franklin Institute*, *230*(1), 95-111.

[33] Shubov, M. A. (2010). Solvability of reduced Possio integral equation in theoretical aeroelasticity. *Advances in Differential Equations*, *15*(9/10), 801-828.

[34] Shubov, M. A. (2009). Asymptotical form of Possio integral equation in theoretical aeroelasticity. *Asymptotic Analysis*, *64*(34), 213-238.

[35] Söhngen, H. (1954). Zur theorie der endlichen Hilbert-transformation. *Mathematische Zeitschrift*, *60*(1), 31-51.

[36] Sutherland, A. N. (2010). A demonstration of pitch-plunge flutter suppression using LQG control. Proceesdings of the *International Congress of the Aeronaultical Sciences, ICAS*.

[37] Theodorsen, T. (1935). General theory of aerodynamic instability and the mechanism of flutter. *NACA report 496*.

[38] Tricomi, F. G. (1957). *Integral equations* (Vol. 5). Courier Corporation.

[39] Watkins, C.E., Runyan, H.L., and Woolston, D.S. (1955). On The Kernel Function of the Integral Equation Relating Lift and Downwash Distributions of Oscillating Finite Wings in Subsonic Flow. *NACA report 1234*.

[40] Webster, J. T. (2011). Weak and strong solutions of a nonlinear subsonic flow-structure interaction: Semigroup approach. *Nonlinear Analysis: Theory, Methods and Applications*, *74*(10), 3123-3136.

[41] Widnall, S. E., and Barrows, T. M. (1970). An analytic solution for two-and three-dimensional wings in ground effect. Journal of Fluid Mechanics, *41*(04), 769-792.

[42] Zerihan, J., and Zhang, X. (2000). Aerodynamics of a single element wing in ground effect. *Journal of aircraft*, *37*(6), 1058-1064.

Vita

Mohamed Ahmed Serry graduated from the American university of Sharjah in 2014 with a Bachelor degree in mechanical engineering and a minor in applied mathematics. His research interests are control theory, continuum mechanics, and functional analysis.